City of Mississauga
Agenda

General Committee

Date
2018/02/14

Time
9:00 AM

Location
Civic Centre, Council Chamber,
300 City Centre Drive, Mississauga, Ontario, L5B 3C1

Members

Mayor Bonnie Crombie	
Councillor Karen Ras	Ward 2
Councillor Chris Fonseca	Ward 3
Councillor John Kovac	Ward 4
Councillor Carolyn Parrish	Ward 5
Councillor Ron Starr	Ward 6 (Chair)
Councillor Nando Iannicca	Ward 7
Councillor Matt Mahoney	Ward 8
Councillor Pat Saito	Ward 9
Councillor Sue McFadden	Ward 10
Councillor George Carlson	Ward 11

Contact
Stephanie Smith, Legislative Coordinator, Legislative Services
905-615-3200 ext. 3795
Email stephanie.smith@mississauga.ca

Find it Online

http://www.mississauga.ca/portal/cityhall/generalcommittee

mississaugavideos on air online

Meetings of General Committee streamed live and archived at Mississauga.ca/videos

INDEX – GENERAL COMMITTEE – FEBRUARY 14, 2018

1. **CALL TO ORDER**

2. **APPROVAL OF AGENDA**

3. **DECLARATION OF CONFLICT OF INTEREST**

4. **PRESENTATIONS** - Nil

5. **DEPUTATIONS**

5.1. Item 8.1 Sonja Banic, Project Lead and Manager, Culture Services and Audrey Holt, Communications Advisor will provide highlights of the City's 2017 Canada 150th Anniversary program

5.2. Mike Portwood and Jason McCulloch, No-Fire Technologies Canada with respect to intumescent paint

6. **PUBLIC QUESTION PERIOD - 15 Minute Limit** (5 minutes per speaker)

Pursuant to Section 42 of the Council Procedure By-law 0139-2013, as amended: General Committee may grant permission to a member of the public to ask a question of General Committee, with the following provisions:

1. The question must pertain to a specific item on the current agenda and the speaker will state which item the question is related to.
2. A person asking a question shall limit any background explanation to two (2) statements, followed by the question.
3. The total speaking time shall be five (5) minutes maximum, per speaker.

7. **CONSENT AGENDA**

8. **MATTERS TO BE CONSIDERED**

8.1. Canada's 150th Anniversary - Final Report

8.2. All-way Stop – Red Brush Drive and Indian Summer Trail (Ward 5)

8.3. All-Way Stop - Saint Barbara Boulevard and Derrydale Drive (Ward 11)

8.4. Lower Driveway Boulevard Parking – Willowbank Trail (Ward 3)

8.5. Lower Driveway Boulevard Parking – Millbrook Lane (Ward 6)

8.6. Lower Driveway Boulevard Parking – Forestwalk Circle (Ward 5)

8.7. Lower Driveway Boulevard Parking – Delaware Drive (Ward 5)

8.8. Execution of Consent to Enter Into Remediation and Indemnity Agreements for 1715 Bloor Street and 2163 Dundas Street East (Ward 3)

8.9. Increase to Contract with HDR Corporation for Contract Administration for three (3) Bridge Structures, Bridge # 017002WB, 017002EB & 034000- (Procurement FA.49.277-16 Wards 5, 6, 7, and 8)

8.10. Assumption of Municipal Works -Registered Plan 43M-1974 - Agro Park Subdivsion, Phase 2 - Agro Park II Copr. (Ward 10)

8.11. Changes to Tow Truck Licensing By-law 521-04, as amended, to Include "Bill 15, Fighting Fraud and Reducing Automobile Insurance Rates Act" Requirements

8.12. Changes to the Tow Truck Licensing By-law 521-04, as amended, for Requirements to Accept All Forms of Payment for Towing Services

8.13. Sole Source Contract Award to Sutera Inc. for the Supply of In-ground Dog Waste Containers and Related Services

8.14. Sole Source Contract Awards for Provision of Electronic Resources for the Mississauga Library System

8.15. Single Source Recommendation with Esri Canada Limited (Esri Canada), File #PRC000595, Contract Negotiation and Award

8.16. Delegation of Authority- Acquisition, Disposal, Administration and Lease of Land and Property- July 1, 2017 to December 31, 2017

8.17. Corporate Policy - Civic Recognition Policy Updates

8.18. Corporate Policy - Provincial Offences Act (POA) Collection of Defaulted Fines

9. **ADVISORY COMMITTEE REPORTS**

9.1. Towing Industry Advisory Committee Report 1 - 2018 - January 22, 2018

9.2. Road Safety Committee Report 1 - 2018 - January 30, 2018

9.3. Traffic Safety Council Report 1 - 2018 January 31, 2018

9.4. Accessibility Advisory Committee Report 1-2018 February 5, 2018

9.5. Heritage Advisory Committee Report 2-2018 February 6, 2018

10. **MATTERS PERTAINING TO REGION OF PEEL COUNCIL**

11. **COUNCILLORS' ENQUIRIES**

12. **OTHER BUSINESS/ANNOUNCEMENTS**

13. **CLOSED SESSION**
(Pursuant to Subsection 239 (2) of the Municipal Act, 2001)

13.1. A proposed or pending acquisition or disposition of land for municipal purposes - Consolidation of Lands for Future Park Development - West side of Ninth Line between Eglinton Avenue West and Highway 401 (Wards 9 & 10)

14. **ADJOURNMENT**

City of Mississauga

Corporate Report

MISSISSAUGA

Date: 2017/12/08	Originator's files:
To: Chair and Members of General Committee	
From: Paul Mitcham, P. Eng, MBA, Commissioner of Community Services	Meeting date: 2018/01/17

Subject

Canada's 150th Anniversary - Final Report

Recommendation

That the Corporate Report dated December 8, 2017 from the Commissioner of Community Services entitled "Canada's 150th Anniversary Final Report" be received for information.

Report Highlights

- In 2017, the City of Mississauga celebrated Canada's 150th Anniversary of Confederation with a year-long program; 63 initiatives were delivered including city-wide celebrations, legacy projects, placemaking and public engagement activities.
- The program was delivered through the coordinated efforts of Culture, Communications, Recreation, Environment, Parks & Forestry, Library, Tourism, Sponsorship, Accessibility, Transportation & Public Works, and MiWay.
- Education, indigenous and community collaborations were offered and Mississauga's rich diversity, culture, heritage, people, and public places were showcased.
- The Canada 150 Community Infrastructure Program (CIP 150) funded 54 infrastructure rehabilitation projects through Intake 1 and 2. Approved projects included the rehabilitation of 19 trails, 26 playgrounds and specific renovation projects at Lake Aquitaine Park, Riverwood, South Common Community Centre and the Small Arms Inspection Building.
- No new budget was used to fund the City's Canada 150 Anniversary program; it was financially supported with Canada 150 grants from the Government of Canada and other granting organizations, through sponsorships, and existing City operating and capital budgets.

Background

Throughout 2017, Canadians celebrated the country's 150th Anniversary of Confederation. The Government of Canada encouraged Canadians and municipalities to celebrate in meaningful ways through programming and public infrastructure.

In a report to General Committee from the Commissioner of Community Services on November 16, 2016, plans to commemorate and celebrate Canada's 150th birthday were clearly outlined to include:

- legacy and placemaking components to inspire pride of place and community;
- main stage events and initiatives that strengthened neighbourhoods through celebration and explored our shared Canadian identity;
- components to educate and connect communities with our shared built and natural environments;
- reconciliation with Mississauga's Indigenous peoples and collaborations with Mississauga's diverse and multicultural population;
- empowering, supporting and connecting community organizations to celebrate, honour and give back to their city;
- recognition of the Community Infrastructure Projects (CIP150) across the city; and
- a comprehensive Marketing and Communications plan that would tie all components together under the theme of Brilliance Together.

With Council's approval, Culture Division led a City-wide team that included staff from Communications, Recreation, Parks and Forestry, Library, Environment, Transit, Accessibility Planning, Tourism, and Sponsorship to develop and implement a program that supported, promoted and aligned with the Canada 150 vision.

Comments

Highlights of the program included:

Main Stage Events – Mississauga Celebration Square (MCS)

- The City launched Canada's 150th Anniversary on New Year's Eve, December 31, 2016 with enhanced fireworks and entertainment. Total Attendance: 30,000
- Canada Day – July 1st was the biggest celebration ever. Total Attendance: 100,000
- Light Up the Square marked the close of the City's year-long celebrations. Total Attendance: 12,000

Three Public Art Projects

- ***CAN Colours 150*- Hurontario Tree Wraps** – created by Amy Mailloux and Tony Di Nardo, the wraps reflected colours from flags of the world in a temporary downtown art installation on Hurontario Street December 2016 through to April 2017.
- ***Pine Sanctuary*** reflects the natural and cultural heritage of Mississauga. Created by Marc Fornes and THEVERYMANY, it was unveiled on September 16. It was installed at the entrance of Riverwood as part of the overall rehabilitation of the park.
- ***Conference at the Council House*** draws attention to the rich Indigenous history of the area and region that is now known as Mississauga. Unveiled on November 21 on MCS, it was created by artists Hadley Howes & Maxwell Stephens (Studio of Received Ideas).

Small Arms Building

- Acquired by the City in March 2017, the Small Arms Inspection Building is one of Mississauga's most significant heritage assets reflecting the contributions of thousands of local women and men who joined the WWII war effort.
- A groundbreaking ceremony was held on June 17.
- The building is currently in redevelopment, it is scheduled to officially open in spring 2018.
- This new facility will provide the opportunity to become a cultural hub as part of the urban renewal efforts in the Lakeview community.

Museums of Mississauga

- Close to a record-breaking 7,000 attended the *Do Your Homework* exhibit highlighting the life and times of former Mississauga Mayor Hazel McCallion from April 12 – 26th.
- The Creative Services team won the Association of Registered Graphic Designers (RGD) Award of Merit for the graphic design of this exhibition and promotional materials.
- Museums of Mississauga staff also worked with community facilitators to lead three conversations on reconciliation from an Indigenous perspective, competency training, The Gathering Event at Bradley Museum, and other Indigenous programming.

Library - *One Book, One Mississauga*

- In the spirit of one big book club, this new program encouraged Mississaugans to read one book -"Requiem"- by Frances Itani.
- Residents participated in a variety of fall library programming including two *Meet the Author* opportunities at Central and Lorne Park Libraries.
- Print and digital copies of the book were borrowed 2,540 times.

Recreation

- Recreation staff launched **Neighbourhood Block Party Kit** to strengthen and connect our neighbourhoods in celebration. A total of 220 block party kits were distributed city-wide.

- On June 14, a multi-class Fresh Air Fitness featured the **ParticipACTION 150 Play List**. Residents participated in this national program by trying one of the 150 activities promoted by ParticipACTION. Close to 1,000 residents participated on Celebration Square.

Parks & Forestry

- The Canada 150 Community Infrastructure Program (CIP150) funded 54 infrastructure rehabilitation projects through Intake 1 and 2 including the rehabilitation of 19 trails, 26

playgrounds and specific renovation projects at Lake Aquitaine Park, Riverwood, South Common Community Centre and the Small Arms Inspection Building.

- A mural to commemorate the 100th Anniversary of Vimy was created and installed at the Garry W. Morden Training Centre as a legacy in honour of those who sacrificed their lives during WW1.
- Each ward had a highly visible Canada 150 presence with red and white annuals planted in park and boulevard flower beds and community centre planters.
- 1, 650 trees were planted (150 in each ward) for Earth Day and 14 rink huts and ports box murals were painted by 13 volunteer groups.

Communications and Marketing

Positioned within the narrative of Mississauga's brand story, the Communications and Marketing plan packaged a year of celebrations, official City events, unique public engagement and promotional opportunities under the theme of *Brilliance Together*.

- A distinctive creative design for Mississauga's Canada 150 campaign was used to create a unified visual theme across all digital and print communications as well as event display materials.
- Beginning in March 2017, card panels measuring 4' x 8' of *Mississauga's Biggest Birthday Card* circulated throughout the City at libraries, community centres, civic buildings and the transit terminal so that residents could contribute their best wishes to Canada. The card panels were produced by T&W's Sign Shop. More than 13,000 residents signed the card in many different languages.
- On June 27, 39 card panels were joined together in a Guinness World Record attempt to create the world's longest greeting card - measuring more than 155 feet. Unfortunately, the attempt did not secure the Guinness record but did generate significant media coverage for the City and the Canada 150 program. In response to increased interest in the card, an additional 12 panels were printed and made available for signing on Canada Day at MCS bringing the total number of panels to 51.
- In the *150 for 150 Volunteer Challenge*, Mississauga residents were encouraged to volunteer 150 hours in 2017. Almost 6,000 hours for various City initiatives were contributed.
- The media relations campaign generated 108 stories and more than 39 million impressions in print and broadcast media.
- Social, digital media and marketing produced nearly 50 million impressions. A special edition eNewsletter was created and distributed to almost 35,000 subscribers in mid-June to highlight Canada Day event.
- Canada 150 content was promoted on www.mississauga.ca/canada150 and across the city through 53 transit ads and on digital screens at community centres, libraries, arenas, Celebration Square and other city facilities.
- Two brand videos were produced for Canada 150. "Mississauga Celebrates" debuted on New Year's Eve followed by "Brilliance Together" on July 1. The videos played across the City, including on the jumbotron at Hershey Centre.

- Official events recognizing the 50th anniversary celebrations were held at Bradley Museum, Huron Park Community Centre, and Lakeview, Lorne Park and Streetsville Libraries. Total Attendance: 1,800
- A total of 44,912 Canada 150 balloons, silicone bracelets, waterless tattoos, foam glow sticks, thunder sticks and seed packets were distributed at C150 events.

In addition:

- Environment – integrated the Canada 150 theme into the City's Environmental Outreach Program. An Earth Market was held on MCS on Saturday, September 23. More than 2,000 in attendance.

- Tourism hosted a Canada 150 Tourism Showcase on March 1 and promoted the City's Canada 150 program using the annual Tourism Guide and Discover Mississauga website.

- Sponsorship worked with existing City partners as well as soliciting new sponsors to compliment the City's Canada 150th Anniversary main stage events. Total $218,000

- National Access Awareness Week was held on June 5, 201 with a Canada 150 focus and theme.

- 2017 Mississauga Bike Challenge participants logged an amazing 204,026 km between June 29th and September 17th, surpassing the 150,000 km community goal by 54,024 km. As a result, 1,360 trees will be planted in Mississauga in the fall of 2017 and the spring of 2018.

- A city-wide Canada 150 street banner program included the installation of 330 banners across all wards in highly visible traffic locations. The hardware will remain on the street poles for future City and community use. Two banners will remain with Museums of Mississauga and Peel Art Gallery Museum (PAMA) for archival purposes. In addition, banners were donated to the City's United Way campaign as fundraisers for this year's Silent Auction.

For a more detailed listing of all initiatives, please see Appendix 1: 2017 Canada 150 Project Listing.

Strategic Plan

- Strategic Pillar – Belong

Financial Impact

No new budget was used to fund the City's Canada 150 Anniversary program; it was financially supported with $5.8 million Canada 150 grants from the Government of Canada and other granting organizations, through sponsorships, and existing City operating and capital budgets.

A total of 54 infrastructure rehabilitation projects were funded by Intake 1 and 2 of the Canada 150 Community Infrastructure Program (CIP150) in the amount of $4.6 million and from approved capital funding from City of Mississauga.

The Small Arms Inspection Building Redevelopment was funded through a Canada 150 Community Infrastructure Program (CIP 150) grant in the amount of $1 million and $1.4 million was transferred from the Toronto Region Conservation Area, as previously approved by Council. Additional funds in the amount of $1.5 million were included from the City's 2017 Capital Budget. In 2018, an additional $250,000 is pending budget approval from the Region of Peel and $882,400 was approved in the City's Capital budget to complete the redevelopment. *Please note these numbers have been rounded.*

The public art legacy *Conference at Council House* was entirely funded by the Department of Canadian Heritage in the amount of $199,000; $165,000 was spent on the public art with the additional $34,000 used by Museums for Indigenous programming and staff competency training.

All other initiatives were funded with grants from the Department of Canadian Heritage, TD Friends of the Environment, Tree Canada, and Veterans Affairs Canada in the amount of $107,370 and $218,000 in sponsorships.

Conclusion

Mississauga residents and City staff had many opportunities to learn more about their local history, celebrate their heritage and develop a deeper understanding of what it means to be Canadian through the City's Canada 150th Anniversary program. Under the theme *Brilliance Together,* 63 initiatives came together in a year-long program that was most memorable and included many legacy components.

Attachments

Appendix 1: 2017 Canada 150 Project Listing

Paul Mitcham, P. Eng, MBA, Commissioner of Community Services

Prepared by: Sonja Banic, Manager, Culture Services & Project Lead, Canada's 150th Anniversary

EVENT/ PROGRAM	DATE	DIVISION	NOTES
CAN Colours 150 Hurontario Tree Wraps	Nov 2016 – April 2017	Culture – Public Art	Annual downtown tree-wrap program on Hurontario Street followed a C150 theme featuring colours of the flags of the world with special accent on red and white. Created by Amy Mailloux and Tony Di Nardo.
C150 logo in MCS skating rink	Dec 5, 2016	Culture – MCS	A large-scale C150 logo was installed within the ice on the MCS skating rink.
C150 Website	Dec 22, 2016	Communications/IT	A custom-designed C150 website was launched to promote the City's C150 programs and events. www.mississauga.ca/canada150
New Year's Eve	Dec 31, 2016	Culture – MCS	C150 kick-off event with 30,000 in attendance. Included an Indigenous blessing and performance, C150 messages in the emcee's and Mayor's remarks, C150 banners installed on MCS, C150 creative on the screens driving to the new website, logo embedded in the skating rink ice, enhanced fireworks.
Mayor's New Year's Levee	Jan 15 2017	Communications	Annual official ceremony to begin the new year with Mayor and Members of Council. Featured C150 backdrop for photos and C150 messaging.
150 for 150 Challenge	Jan 27	Communications	Launched Jan 27, ongoing promotion via social media to encourage public participation.
C150 Email signature	Jan 31	Communications/IT	Distributed to all staff to incorporate into their email signature for the year.
Grants – C150 Projects	Feb 8	Culture	8 community projects approved for $5,000 each (total of $40,000): Art Gallery of Mississauga – *Expanding Discourse PAC150*; Canada Day Together Festival – *I Am Canada: Visual Art Depiction;* Chamber Music Society – *Glenn Gould's 85th*; Indigenous Stories - *Cow Over Moon* ; Home - *Frog in Hand*; Mississauga Arts Council – Utility Boxes and Banners Neighbourhood Identity Projects; Mississauga Camera Club – Canada 150 Exhibition; Monster Mode - *Monstrartity*
Rink Boards	Installed Feb	Recreation	Installation completed in 23 rinks across the city and at Hershey Centre for all of 2017.
National Flag of Canada Day	Feb 15	Communications	National Flag of Canada Day – The National Flag of Canada is celebrating its 52nd anniversary. Recognized at GC with Canadian flags a special photo opp and through social media.
C150 Promotional Items	Feb 17	Communications	Two combined orders placed for bulk order pricing. A total of 44,912 Canada 150 balloons, silicone bracelets, waterless tattoos, foam glow sticks, thunder sticks and seed packets were distributed at C150 events.
Mississauga Tourism Showcase	March 1	Recreation	Event held at C Banquets in the Civic Centre - featured C150 banners, backdrop, the C150 brand video and C150 give-aways.

EVENT/ PROGRAM	DATE	DIVISION	NOTES
CIP Intake 2 Announcement	March 3	Communications	$2.5 million in CIP Intake 2 funding announced at event held at South Common Community Centre with Minister Navdeep Bains, Mayor and Council
Mississauga's Biggest Birthday Card Launch	March 10	Communications	51 Card panels launched and circulated at libraries, community centres and special events throughout the City until Canada Day.
Lorne Park 50th Anniversary	April 8	Library	Anniversary event held from 2 – 4 p.m. included an official ceremony, entertainment and refreshments.
Vimy Ridge Mural	April 9	Parks	A commemorative mural was created and installed at Mississauga's Garry W. Morden Training Centre to commemorate the 100th Anniversary of Vimy and to honour those who sacrificed their lives. A collection of images relating to both the Battle of Vimy Ridge and World War I are featured in the mural's design.
"Do Your Homework" Hazel McCallion Exhibit	April 12 – 26	Culture - Museums	This special exhibit opened with "In Conversation with Hazel McCallion and Mayor Bonnie Crombie", Great Hall, Council Chambers. Promotion launched Feb 14 with Hazel McCallion Day. Social media contest. Close to 7000 attended exhibition over the two weeks, combined with the In Conversation attendance. Record-breaking attendance for our Museums.
Cultural Competency Training	April 18	Culture – Museums	As part of the Canada 150 celebrations focused on the Year of Truth and Reconciliation, the City of Mississauga's Culture Division concentrated on continuing to build strong and respectful partnerships with the Indigenous community. To help understand both the historical and contemporary issues facing the Indigenous community, the Culture Division hosted a half-day session on Indigenous Cultural Competency. This training session was led by Michael Etherington, Manager of Culture Programs, Native Canadian Centre Toronto and Steve Paquette. The Native Canadian Centre Toronto is Toronto's oldest Indigenous community organization and one of the original Friendship Centres in Canada. It provides social, recreational, cultural and spiritual services for the Indigenous community and visitors alike.
Earth Day Tree Planting	April 22	Parks	Earth Day Tree Plantings in all wards. 150 trees in each ward. 1,650 trees planted in total. 600 volunteers involved.
City-wide Banners/Transit Shelter Ads	Install April/ May	Culture	330 city-wide street banners were installed in May (30 banners in every ward) in highly visible traffic locations. The banners were removed in December. The hardware will remain on the poles for future City and community use. Two banners will remain with Museums of Mississauga and Peel Art Gallery and Museum (PAMA) for archival purposes. In addition, banners were donated to the City's United Way campaign as part of this year's silent auction. 53 transit shelter ads installed in May until June 30.

EVENT/ PROGRAM	DATE	DIVISION	NOTES
Small Project Matching Grants	Starting in May	Recreation	Provides funding for projects that will strengthen neighbourhoods, increase resident engagement, and enhance opportunities for Mississauga residents to participate in events and activities at the neighbourhood level. In 2017, Canada 150 Neighbourhood Celebrations will be considered all year. A maximum of $2,500 can be requested.
Erika Defreitas Exhibition	May 3 – Aug 20	Culture – Museums	*Bringing Water Back to Bradley,* part of the Contact Photography Festival. The exhibition examined how heritage house museums are experienced using Lake Ontario as poetic inspiration.
C150 Presentation to General Committee	May 31	Culture	Culture presented the C150 program to date and presented Canada Day plans for MCs.
Community Conversations	May 31 June 28 July 26	Culture - Museums	The Culture Division and Museums of Mississauga worked with community facilitators to lead three Community Conversations across the city to discuss reconciliation from an Indigenous perspective. Topics included: Understanding Community Responsibilities in Reconciliation; Memorialization and Erasure: Highlighting Historical and Current Realities of Reconciliation; Finding (Your) Place: Reconciliation, "Diversity" and Community-Building. All three sessions were sold out or close to selling out.
National Access Awareness Week	June 5	F& PM/ Communications	Event showcased the advances made in accessibility at the City with a C150 theme.
Employee Health Fair	June 6	Human Resources	Canada 150 booth with program information at the Employee Health Fair in the Great Hall.
Civic Recognition Evening	June 6	Communications	Annual official event included C150 backdrop, banners and messaging.
Fresh Air Fitness featuring ParticipACTION Playlist	June 14	Recreation	A multi-class Fresh Air Fitness featured the ParticipACTION 150 Play List. Residents were encouraged to participate in the on-site activation of this national program by trying one of the 150 activities promoted by ParticipACTION. Close to 1,000 residents were in attendance at MCS.
Special edition eNewsletter – Canada 150	June 15	Communications	A special edition of the City's eNewsletter was distributed to 35,000 subscribers on June 15. An archived version can be seen here
Small Arms Groundbreaking Ceremony	June 17	Culture	Event held on-site from 11 a.m. to 12:30 p.m. to officially launch the CIP 150 project. Also included the official planting of Vimy trees.
Bradley Museum 50th Anniversary	June 24	Culture - Museums	Event held from 10 am – 4:00 pm; Official Ceremony at 11 a.m. Hundreds in attendance.
Guinness World Record Attempt	June 27	Communications	39 – 4'x8' panels of Mississauga's Biggest Birthday Card were joined together on MCS in a Guinness World Record attempt for the longest greeting card.
Mississauga Bike Challenge	June 29 – Sept 17	Transportation – Active Transportation	Participants logged 204,026 km between June 29th and September 17th, surpassing the 150,000 km community goal by 54,024 km. As a result, 1360 trees will be planted in Mississauga

EVENT/ PROGRAM	DATE	DIVISION	NOTES
			in the fall of 2017 and the spring of 2018.
Canada Day, Celebration Square	July 1	Culture – MCS	On July 1st, 100,000 people celebrated Canada 150 in the heart of the city. The event reflected on who we are as a city, with successful C150 enhancements celebrating our shared experiences from the C150 Parade of Nations presented by Carassauga featuring 24 nations and 144 participants; stories about our unique Canadian identity told through Virtual Reality in the Sesqui Pavilion; 20 panels of Mississauga's Biggest Birthday Card available for signatures and best wishes; a diverse and dynamic line-up on 3 stages showcasing 18 artists/groups totaling 53 performers including the international recording artist K'NAAN; and a 10-minute fireworks show. **Other Canada Day Celebrations were held across the city:** Malton Canada Day Celebration Port Credit Paint the Town Red Streetsville Canada Day Celebration Churchill Meadows Canada Day Together Festival Living Arts Centre Canada Day Celebrations
One Book, One Mississauga	July 1	Library	Book title announced on Canada Day – *Requiem* by Frances Itani. Two visits by the author - September 25 and November 9; and additional book club visits.
Lakeview Library 50th Anniversary	July 4	Library	Anniversary event held from 6 – 8:30 p.m. included an official ceremony, entertainment and refreshments.
CIP Official Opening	Sept 16	Communications/ Parks	Official ceremony on Chappell House lawn at Riverwood recognized the 54 CIP 150 projects (Intake 1 and 2). Interpretive signage highlighting all of the projects was produced by Parks and featured onsite.
Official Unveiling of *Pine Sanctuary*	Sept 16	Communications/ Culture	As part of the CIP official opening, a dedication was held and the public art legacy piece was unveiled at the entryway to Riverwood.
Earth Market	Sept 23	Environment	Event held on MCS from 1:00 – 9:00 pm provided a one-stop shop market like experience for all things green, featuring environmental exhibitors and vendors, music, local and sustainable food.2,000 in attendance.
Streetsville Library 50th Anniversary	Sept 23	Library	Anniversary event held from 2 – 4 pm included an official ceremony, entertainment and refreshments.
The Gathering	Sept 23	Culture - Museums	The Gathering included a number of traditional Indigenous programming which ran throughout the day at Bradley Museum. The programming included a sunrise ceremony and a traditional sweat lodge. 70 attendees for sunrise ceremony. 130 attendees for day-time programming.
Welcome Day	Oct 14	Communications	Event ran from 10 a.m. to 1 p.m. FREE family activities coffee & snacks, an information fair, a City bus tour and meet Members

EVENT/ PROGRAM	DATE	DIVISION	NOTES
			of Council. First 150 guests received a FREE Canada 150 souvenir.
Huron Park Community Centre 50th Anniversary	Oct 21	Recreation	Afternoon of activities included an official ceremony, entertainment and refreshments. 1200 people in attendance.
Conference at the Council House Official Unveiling	Nov 21	Culture – Public Art	Created by the artists Hadley Howes & Maxwell Stephens (Studio of Received Ideas). The artwork draws attention to the rich Indigenous history of the area and region that is now known as Mississauga. It features an artistic replica of the tower that tops the historic Council House, built 132 years ago, on the Mississauga of the New Credit First Nation Reserve in Hagersville. Thirty birds cast in bronze patinas will be placed on and around the tower installed on MCS to signify the diverse community that inhabits the area today. This legacy artwork was supported through a contribution of $199,000 from the Department of Canadian Heritage ($165K for the public art, $34K for Museums Indigenous programming).
Light up the Square	Nov 25	Culture – MCS	An evening of festive activities to kick off the holiday season hosted by Master of Ceremonies, Liem Vu of Global News Toronto. The event started at noon with a Holiday Street Market featuring more than 50 artisan and food vendors. Entertainment began at 5 p.m. Official ceremony at 6:45 p.m. with Mayor, Members of Council and special guests and the lighting of the Christmas tree. Sponsored by Rabba Fine Foods, family friendly programming ran from 5 – 9 p.m. including: Winter Wonderland - Face painting, digital spray paint wall, crafts, performance from the Culture Dance Pack; Polar Stop - Light painting photo booth, Polar Bear Selfie Stop, giant Light Brite, Sauga Busks Stage; Photos with Santa and his elves, sponsored by Insurance Hotline; Glow lounge sponsored by Alectra; skating on the largest outdoor rink in Mississauga. Attendance: 12,000
Celebrate Video		Communications	The *Mississauga Celebrates* brand video played at various venues throughout the City including the scoreboard at Hershey Centre during Steelheads and Raptor 905 games. The 30-second teaser of *Brilliance Together* was released on June 19. The full two-minute version launched on Canada Day.
Block Party Kits		Recreation	220 kits distributed.
C150 Beautification of Parks		Parks/Forestry	Beautification murals (14 - rink huts/sports boxes) incorporated in locations across the City. Red and white floral plantings, Red Maple tree plantings in significant park locations. Red picnic tables with C150 logo.

City of Mississauga

Corporate Report

MISSISSAUGA

Date: 2018/01/30 To: Chair and Members of General Committee From: Geoff Wright, P. Eng., MBA, Commissioner of Transportation and Works	Originator's files: MG.23.REP RT.10.Z-36E Meeting date: 2018/02/14

Subject

All-way Stop - Red Brush Drive and Indian Summer Trail (Ward 5)

Recommendation

That an all-way stop control not be implemented at the intersection of Red Brush Drive and Indian Summer Trail as the warrants have not been met as outlined in the report from the Commissioner of Transportation and Works, dated January 30, 2018, entitled "All-way Stop - Red Brush Drive and Indian Summer Trail (Ward 5)".

Background

Concerns have been identified by an area resident to the Ward Councillor regarding the need for operational improvements at the intersection of Red Brush Drive and Indian Summer Trail. The Ward Councillor has requested that the Transportation and Works Department submit a report to General Committee regarding the implementation of an all-way stop at the intersection.

Present Status

Currently, the intersection of Red Brush Drive and Indian Summer Trail operates as a four-leg intersection with a stop control for east and west bound motorists on Indian Summer Trail and free flow for northbound and southbound traffic on Red Brush Drive. A location map is attached as Appendix 1.

Comments

An a.m. / p.m. manual turning movement count was completed on Thursday, September 21, 2017 at this intersection to determine if an all-way stop is warranted.

The results are as follows:

Red Brush Drive and Indian Summer Trail	Warrant Value
Part "A": Volume for All Approaches	81%
Part "B": Volume Splits	40%

In order for an all-way stop to be warranted, both Parts "A" and "B" must equal 100 percent. Based on the results, an all-way stop is not warranted at the intersection of Red Brush Drive and Indian Summer Trail.

A review of the collision history at this intersection revealed one reported collision within the last three years that is the type considered correctable by the use of an all-way stop. An all-way stop would not be warranted based on the collision history.

The ward Councillor has been advised of the above results.

Financial Impact

Not applicable.

Conclusion

Based on the manual turning movement count warrants and collision history, the Transportation and Works Department does not recommend the installation of an all-way stop control at the intersection of Red Brush Drive and Indian Summer Trail.

Attachments

Appendix 1: Location Map - All-Way Stop - Red Brush Drive and Indian Summer Trail (Ward 5)

Geoff Wright, P. Eng., MBA, Commissioner of Transportation and Works

Prepared by: Haydn Kocznur, Road Safety Technician

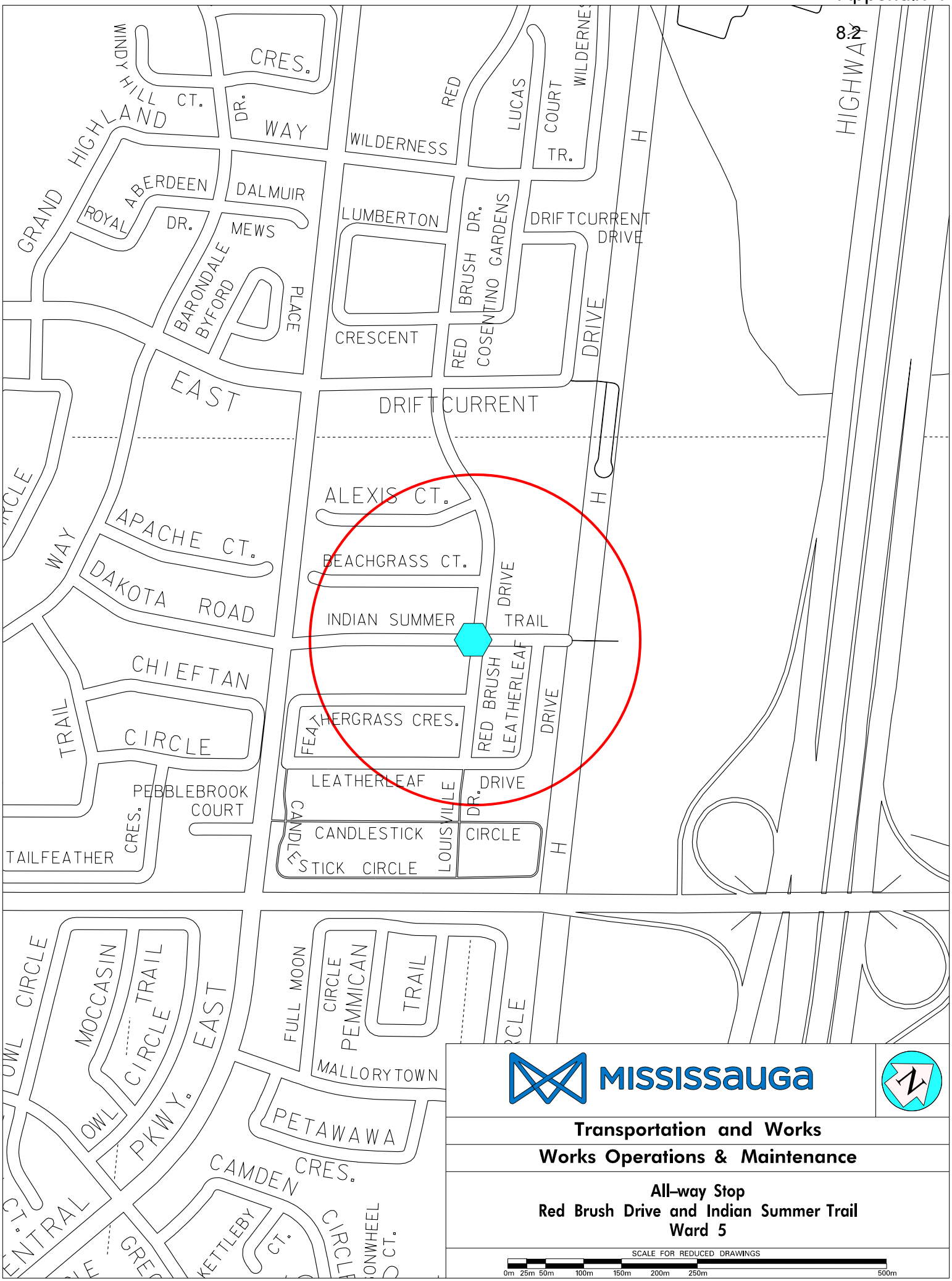
WINDY HILL CT.
CRES.
DR.
WAY
GRAND HIGHLAND
ABERDEEN
ROYAL
DR.
DALMUIR
MEWS
BARONDALE
BYFORD
PLACE
WILDERNESS
RED
LUCAS
COURT
WILDERNESS
TR.
LUMBERTON
BRUSH DR.
COSENTINO GARDENS
DRIFTCURRENT DRIVE
CRESCENT
RED
DRIVE
H
HIGHWAY
EAST
DRIFTCURRENT
ALEXIS CT.
APACHE CT.
WAY
BEACHGRASS CT.
DAKOTA ROAD
DRIVE
INDIAN SUMMER
TRAIL
CHIEFTAN
TRAIL
CIRCLE
FEATHERGRASS CRES.
RED BRUSH
LEATHERLEAF
DRIVE
LEATHERLEAF
DRIVE
PEBBLEBROOK
COURT
CRES.
CANDLESTICK
CIRCLE
TAILFEATHER
CANDLESTICK CIRCLE
LOUISVILLE
DR.
H
CIRCLE
MOCCASIN
TRAIL
CIRCLE
EAST
OWL
PKWY.
FULL MOON
CIRCLE
PEMMICAN
TRAIL
MALLORYTOWN
PETAWAWA
CAMDEN
CRES.
KETTLEBY
CT.
CIRCLE
ONWHEEL
CT.
ENTRAL
MISSISSAUGA
Transportation and Works
Works Operations & Maintenance
All–way Stop
Red Brush Drive and Indian Summer Trail
Ward 5
SCALE FOR REDUCED DRAWINGS
0m 25m 50m 100m 150m 200m 250m 500m

City of Mississauga

Corporate Report

MISSISSAUGA

Date: 2018/01/30 To: Chair and Members of General Committee From: Geoff Wright, P. Eng., MBA, Commissioner of Transportation and Works	Originator's files: MG.23.REP RT.10.Z-52 Meeting date: 2018/02/14

Subject

All-Way Stop - Saint Barbara Boulevard and Derrydale Drive (Ward 11)

Recommendation

That an all-way stop control not be implemented at the intersection of Saint Barbara Boulevard and Derrydale Drive as the warrants have not been met, as outlined in the report from the Commissioner of Transportation and Works, dated January 30, 2018, entitled "All-Way Stop - Saint Barbara Boulevard and Derrydale Drive (Ward 11)".

Background

Concerns have been identified by area residents regarding vehicle speeds and excessive traffic on Saint Barbara Boulevard. The Ward Councillor has requested that the Transportation and Works Department submit a report to General Committee regarding the implementation of an all-way stop at the intersection of Saint Barbara Boulevard and Derrydale Drive.

Present Status

Currently, the intersection of Saint Barbara Boulevard and Derrydale Drive operates as a three-leg intersection with a one-way stop control for eastbound traffic on Derrydale Drive and free flow for northbound and southbound traffic on Saint Barbara Boulevard. A location map is attached as Appendix 1.

Comments

An a.m./p.m. manual turning movement count was completed on December 6, 2017 at the intersection of Saint Barbara Boulevard and Derrydale Drive to determine if an all-way stop control is warranted. The results are as follows:

Saint Barbara Boulevard and Derrydale Drive	Warrant Value
Part "A": Volume for All Approaches	100%

Part “B”: Volume Splits 48%

In order for an all-way stop to be warranted, both Parts “A” and “B” must equal 100 percent. Based on the results, an all-way stop is not warranted at the intersection Saint Barbara Boulevard and Derrydale Drive.

A review of the collision history at the intersection of Saint Barbara Boulevard and Derrydale Drive revealed one reported collision within the past three years that is the type considered correctable by the use of an all-way stop. All-way stop signs are warranted on local roadways if at least five collisions occur in a 12-month period, provided the collisions are of the type considered correctable by the use of all-way stop signs. An all-way stop is therefore not warranted based on the collision history.

The ward Councillor has been advised of the above results.

Financial Impact

Not Applicable.

Conclusion

Based on the manual turning movement count warrants and collision history, the Transportation and Works Department does not recommend the installation of an all-way stop at the intersection of Saint Barbara Boulevard and Derrydale Drive.

Attachments

Appendix 1: Location Map - All-Way Stop - Saint Barbara Boulevard and Derrydale Drive (Ward 11)

Geoff Wright, P. Eng., MBA, Commissioner of Transportation and Works

Prepared by: Ouliana Drobychevskaia, Traffic Operations Technologist

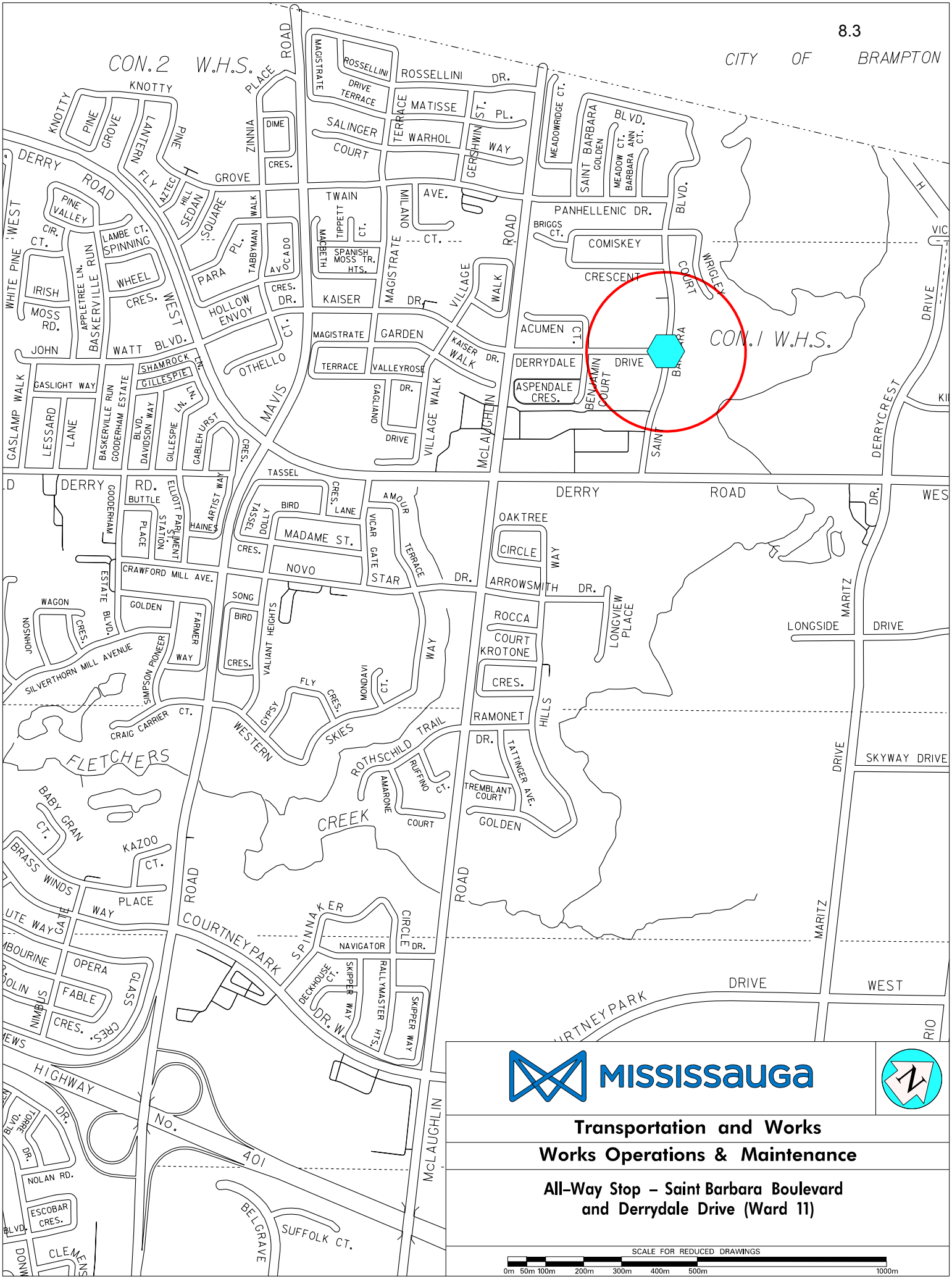
CITY OF BRAMPTON
CON. 2 W.H.S.
CON. 1 W.H.S.
DERRY ROAD
WEST
KNOTTY
PINE
GROVE
LANTERN
FLY
AZTEC
HILL
SEDAN
SQUARE
WALK
PINE VALLEY
CIR.
LAMBE CT.
SPINNING
WHEEL
CRES.
IRISH
MOSS RD.
APPLETREE LN.
BASKERVILLE RUN
WHITE PINE
JOHN
WATT BLVD.
SHAMROCK
GILLESPIE
GASLIGHT WAY
GASLAMP WALK
LESSARD
LANE
BASKERVILLE RUN
GOODERHAM ESTATE
BLVD.
DAVIDSON WAY
GILLESPIE LN.
GABLEHURST
CRES.
MAVIS
OTHELLO
CT.
HOLLOW ENVOY
PARA
PL.
TABBYMAN
AVOCADO
ZINNIA
PLACE
DIME
CRES.
ROAD
MAGISTRATE
ROSSELLINI
DRIVE TERRACE
ROSSELLINI DR.
MATISSE
TERRACE
ST.
PL.
SALINGER
COURT
WARHOL
GERSHWIN
WAY
TWAIN
TIPPETT
CT.
MACBETH
SPANISH MOSS TR.
HTS.
MILANO
AVE.
CT.
MAGISTRATE
KAISER
DR.
VILLAGE
WALK
ROAD
MEADOWRIDGE CT.
SAINT BARBARA BLVD.
GOLDEN
MEADOW CT.
BARBARA ANN CT.
PANHELLENIC DR.
BRIGGS CT.
COMISKEY
CRESCENT
WRIGLEY
COURT
ACUMEN
CT.
DERRYDALE
DRIVE
ASPENDALE CRES.
BENJAMIN COURT
SAINT
BARBARA
DERRYCREST
DRIVE
MAGISTRATE
GARDEN
TERRACE
VALLEYROSE
KAISER WALK
DR.
OAGLIANO
DR.
DRIVE
VILLAGE WALK
McLAUGHLIN
TASSEL
CRES.
LANE
AMOUR
BIRD
DOLLY TASSEL
MADAME ST.
VICAR
GATE
TERRACE
STAR
DR.
NOVO
CRES.
DERRY RD.
COOGERHAM
BUTTLE
PLACE
ELLIOTT PARLIAMENT STATION
HAINES
ARTIST WAY
CRAWFORD MILL AVE.
ESTATE BLVD.
GOLDEN
FARMER
WAY
WAGON
JOHNSON
CRES.
SILVERTHORN MILL AVENUE
SIMPSON PIONEER
CRAIG CARRIER CT.
FLETCHERS
BABY GRAN
CT.
KAZOO
CT.
BRASS WINDS
PLACE
WAY
SONG
BIRD
CRES.
VALIANT HEIGHTS
FLY
CRES.
GYPSY
MONDAVI
CT.
WESTERN
SKIES
WAY
ROTHSCHILD TRAIL
AMARONE
RUFFINO
CT.
COURT
CREEK
COURTNEY PARK
ROAD
SPINNAKER
CIRCLE
NAVIGATOR
DR.
DECKHOUSE CT.
SKIPPER WAY
RALLYMASTER HTS.
SKIPPER WAY
DR. W.
OAKTREE
CIRCLE
WAY
ARROWSMITH DR.
ROCCA
COURT
KROTONE
CRES.
RAMONET
DR.
HILLS
TATTINGER AVE.
TREMBLANT COURT
GOLDEN
LONGVIEW PLACE
LONGSIDE
DRIVE
MARITZ
DRIVE
SKYWAY DRIVE
DRIVE
WEST
OPERA
FABLE
GLASS
CRES.
HIGHWAY
No. 401
NOLAN RD.
ESCOBAR CRES.
BELGRAVE
SUFFOLK CT.
McLAUGHLIN
MISSISSAUGA
Transportation and Works
Works Operations & Maintenance
All-Way Stop – Saint Barbara Boulevard and Derrydale Drive (Ward 11)
SCALE FOR REDUCED DRAWINGS
0m 50m 100m 200m 300m 400m 500m 1000m

City of Mississauga

Corporate Report

MISSISSAUGA

Date: 2018/01/30

To: Chair and Members of General Committee

From: Geoff Wright, P. Eng., MBA, Commissioner of Transportation and Works

Originator's files:
MG.23.REP
RT.10.Z-27

Meeting date:
2018/02/14

Subject

Lower Driveway Boulevard Parking - Willowbank Trail (Ward 3)

Recommendation

That a by-law be enacted to amend the Traffic By-law 555-00, as amended, to implement lower driveway boulevard parking between the curb and sidewalk, at any time on both sides of Willowbank Trail between Rathburn Road East and Westminster Place, as outlined in the report from the Commissioner of Transportation and Works, dated January 30, 2018, entitled "Lower Driveway Boulevard Parking - Willowbank Trail (Ward 3)".

Background

The Transportation and Works Department received a completed petition from an area resident to implement lower driveway boulevard parking on both sides of Willowbank Trail between Rathburn Road East and Westminster Place. Lower driveway boulevard parking between the curb and sidewalk is currently prohibited and parking is prohibited from a point 25 metres (82 feet) south of Greycedar Crescent to Greycedar Court from 8:00 a.m. to 4:00 p.m. Monday to Friday from September 1 to June 30 on both sides. A location map is attached as Appendix 1.

Comments

To determine the level of support for lower driveway boulevard parking between the curb and sidewalk, a parking questionnaire was distributed to the residents of Willowbank Trail between Rathburn Road East and Westminster Place.

31 questionnaires were delivered and seven (23%) were returned; five (71%) supported the implementation of lower driveway boulevard parking and two (29%) were opposed. Since greater than 66% of the total respondents support lower driveway boulevard parking, the Transportation and Works Department recommends implementing lower driveway boulevard parking between the curb and sidewalk, at any time, on both sides of Willowbank Trail between

Rathburn Road East and Westminster Place.

The Ward Councillor supports the proposal for lower driveway boulevard parking. The existing on-street parking regulations will be maintained.

Financial Impact

Costs for the sign installation can be accommodated in the 2018 operating budget.

Conclusion

Based on the results of the questionnaire, the Transportation and Works Department supports lower driveway boulevard parking between the curb and sidewalk, on both sides of Willowbank Trail between Rathburn Road East and Westminster Place.

Attachments

Appendix 1: Location Map - Lower Driveway Boulevard Parking - Willowbank Trail

Geoff Wright, P. Eng., MBA, Commissioner of Transportation and Works

Prepared by: Haydn Kocznur, Road Safety Technician

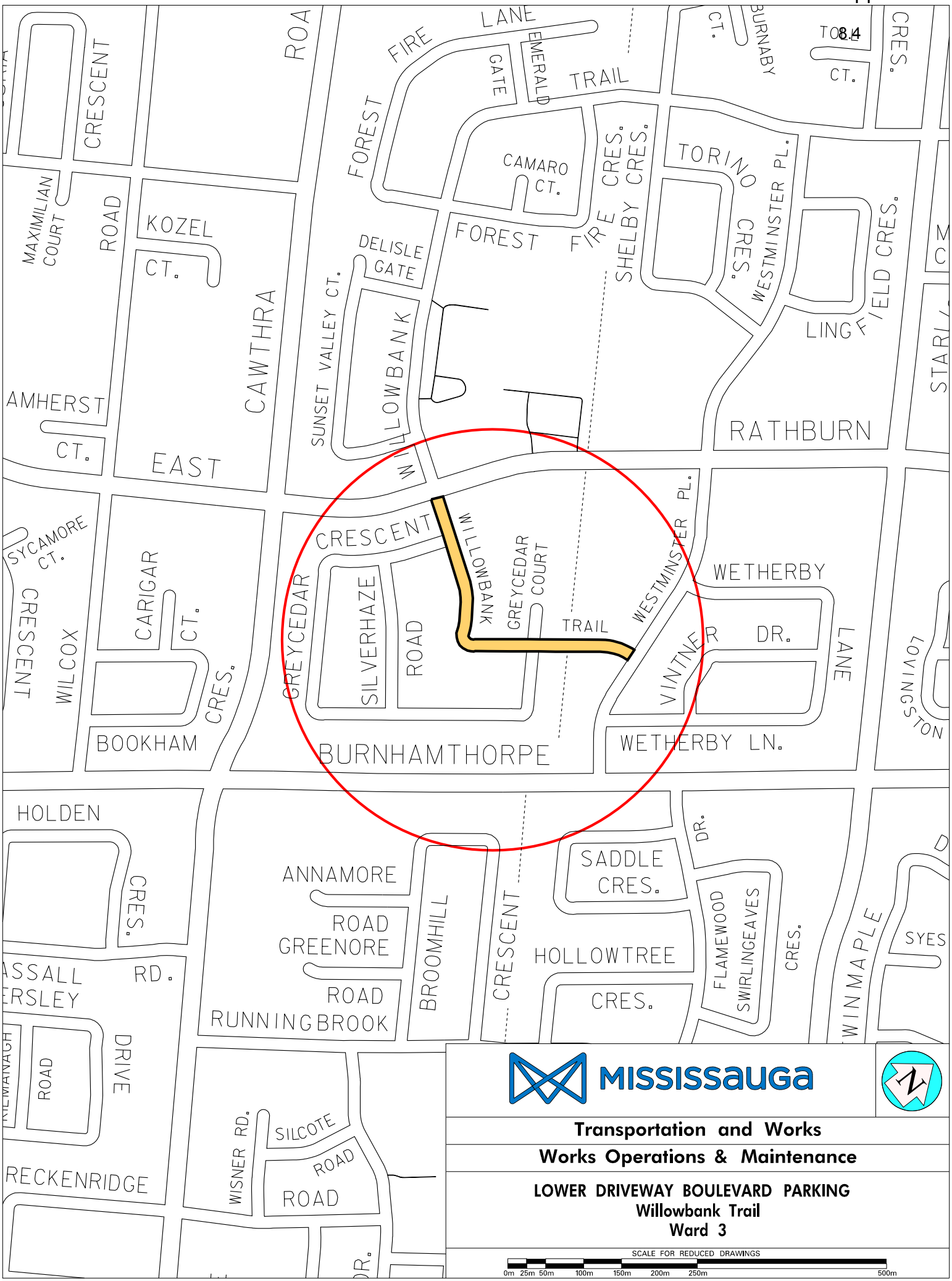
FIRE LANE
EMERALD GATE
TRAIL
FOREST
CAMARO CT.
SHELBY CRES.
TORINO CRES.
WESTMINSTER PL.
BURNABY CT.
TOR CT.
CRES.
CRESCENT
ROA
MAXIMILIAN COURT
ROAD
KOZEL CT.
CAWTHRA
EAST
AMHERST CT.
DELISLE GATE
SUNSET VALLEY CT.
WILLOWBANK
FOREST FIRE
LINGFIELD CRES.
RATHBURN
STARL
SYCAMORE CT.
CRESCENT
WILCOX
CARIGAR CT.
CRES.
BOOKHAM
CRESCENT
GREYCEDAR
SILVERHAZE ROAD
WILLOWBANK
GREYCEDAR COURT
TRAIL
WESTMINSTER PL.
WETHERBY
VINTNER DR.
LANE
WETHERBY LN.
BURNHAMTHORPE
LOVINGSTON
HOLDEN CRES.
ANNAMORE ROAD
GREENORE ROAD
RUNNINGBROOK
BROOMHILL
CRESCENT
SADDLE CRES.
HOLLOWTREE CRES.
DR.
FLAMEWOOD
SWIRLINGEAVES
CRES.
WINMAPLE
SYES
ASSALL RD.
ERSLEY
ROAD
DRIVE
RECKENRIDGE
WISNER RD.
SILCOTE ROAD
ROAD
MISSISSAUGA
Transportation and Works
Works Operations & Maintenance
LOWER DRIVEWAY BOULEVARD PARKING
Willowbank Trail
Ward 3
SCALE FOR REDUCED DRAWINGS
0m 25m 50m 100m 150m 200m 250m 500m

City of Mississauga

Corporate Report

MISSISSAUGA

Date: 2018/01/30

To: Chair and Members of General Committee

From: Geoff Wright, P. Eng., MBA, Commissioner of Transportation and Works

Originator's files:
MG.23.REP
RT.10.Z-38W

Meeting date:
2018/02/14

Subject

Lower Driveway Boulevard Parking - Millbrook Lane (Ward 6)

Recommendation

That a by-law be enacted to amend the Traffic By-law 555-00, as amended, to implement lower driveway boulevard parking between the curb and sidewalk, at any time on Millbrook Lane between Willow Way and Bristol Road West, as outlined in the report from the Commissioner of Transportation and Works, dated January 30, 2018, entitled "Lower Driveway Boulevard Parking - Millbrook Lane (Ward 6)".

Background

The Transportation and Works Department received a completed petition from an area resident to implement lower driveway boulevard parking on Millbrook Lane between Willow Way and Bristol Road West. Lower driveway boulevard parking between the curb and sidewalk is currently prohibited and five-hour parking is permitted on Millbrook Lane. A location map is attached as Appendix 1.

Comments

To determine the level of support for lower driveway boulevard parking between the curb and sidewalk, a parking questionnaire was distributed to the residents of Millbrook Lane.

43 questionnaires were delivered and 12 (28%) were returned; 10 (83%) supported the implementation of lower driveway boulevard parking and two (17%) were opposed. Since greater than 66% of the total respondents support lower driveway boulevard parking, the Transportation and Works Department recommends implementing lower driveway boulevard parking between the curb and sidewalk, at any time, on both sides of Millbrook Lane between Willow Way and Bristol Road West.

The Ward Councillor supports the proposal for lower driveway boulevard parking. The existing on-street parking regulations will be maintained.

Financial Impact

Costs for the sign installation can be accommodated in the 2018 operating budget.

Conclusion

Based on the results of the questionnaire, the Transportation and Works Department supports lower driveway boulevard parking between the curb and sidewalk, on Millbrook Lane between Willow Way and Bristol Road West.

Attachments

Appendix 1: Location Map - Lower Driveway Boulevard Parking - Millbrook Lane

Geoff Wright, P. Eng., MBA, Commissioner of Transportation and Works

Prepared by: Haydn Kocznur, Road Safety Technician

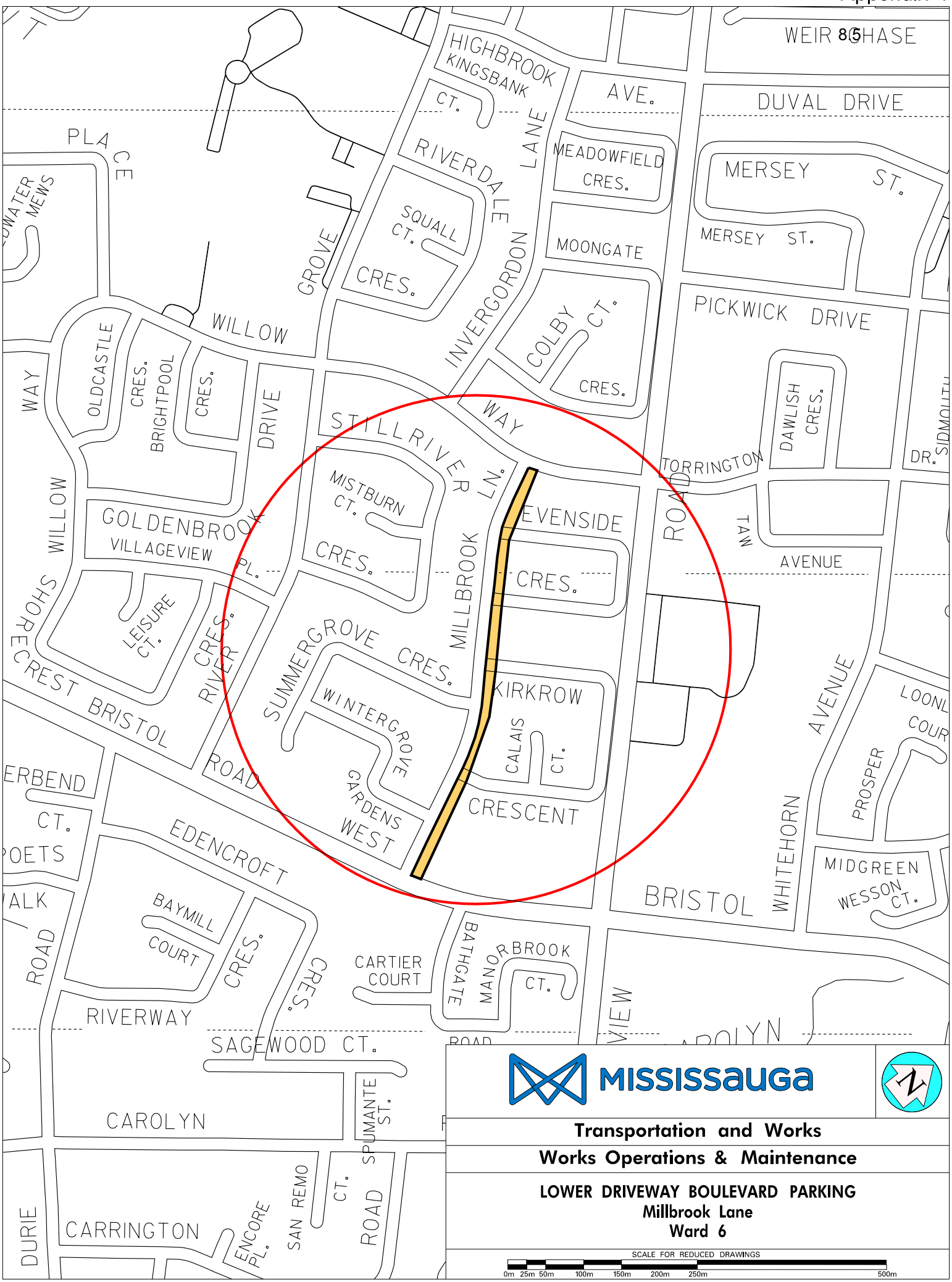
WEIR CHASE
HIGHBROOK
KINGSBANK
CT.
AVE.
DUVAL DRIVE
PLACE
RIVERDALE
LANE
MEADOWFIELD
CRES.
MERSEY
ST.
MERSEY ST.
WATER MEWS
SQUALL
CT.
CRES.
GROVE
MOONGATE
INVERGORDON
COLBY
CT.
CRES.
PICKWICK DRIVE
WILLOW
OLDCASTLE
CRES.
BRIGHTPOOL
CRES.
DRIVE
WAY
STILLRIVER
WAY
DAWLISH
CRES.
TORRINGTON
DR.
SIDMOUTH
MISTBURN
CT.
CRES.
EVENSIDE
CRES.
ROAD
TAW
AVENUE
WILLOW
GOLDENBROOK
VILLAGEVIEW
PL.
MILLBROOK
LN.
SHORE
LEISURE
CT.
RIVER
CRES.
SUMMERGROVE
CRES.
CREST
BRISTOL
WINTERGROVE
KIRKROW
CALAIS
CT.
AVENUE
LOONL
COUR
PROSPER
ERBEND
CT.
ROAD
GARDENS
WEST
CRESCENT
POETS
EDENCROFT
WHITEHORN
MIDGREEN
WESSON
CT.
ALK
BAYMILL
COURT
CRES.
BRISTOL
ROAD
CARTIER
COURT
BATHGATE
MANORBROOK
CT.
CRES.
RIVERWAY
SAGEWOOD CT.
VIEW
CAROLYN
SPUMANTE
ST.
DURIE
CARRINGTON
ENCORE
PL.
SAN REMO
CT.
ROAD
MISSISSAUGA
Transportation and Works
Works Operations & Maintenance
LOWER DRIVEWAY BOULEVARD PARKING
Millbrook Lane
Ward 6
SCALE FOR REDUCED DRAWINGS
0m 25m 50m 100m 150m 200m 250m 500m

City of Mississauga

Corporate Report

MISSISSAUGA

Date: 2018/01/30 To: Chair and Members of General Committee From: Geoff Wright, P. Eng., MBA, Commissioner of Transportation and Works	Originator's files: MG.23.REP RT.10.Z-36W Meeting date: 2018/02/14

Subject

Lower Driveway Boulevard Parking - Forestwalk Circle (Ward 5)

Recommendation

That a by-law be enacted to amend the Traffic By-law 555-00, as amended, to implement lower driveway boulevard parking between the curb and sidewalk, at any time on Forestwalk Circle, as outlined in the report from the Commissioner of Transportation and Works, dated January 30, 2018, entitled "Lower Driveway Boulevard Parking - Forestwalk Circle (Ward 5)".

Background

The Transportation and Works Department received a completed petition from an area resident to implement lower driveway boulevard parking on Forestwalk Circle. Lower driveway boulevard parking between the curb and sidewalk is currently prohibited and five-hour parking is permitted on Forestwalk Circle. A location map is attached as Appendix 1.

Comments

To determine the level of support for lower driveway boulevard parking between the curb and sidewalk, a parking questionnaire was distributed to the residents of Forestwalk Circle.

65 questionnaires were delivered and 26 (40%) were returned; 25 (96%) supported the implementation of lower driveway boulevard parking and one (4%) was opposed. Since greater than 66% of the total respondents support lower driveway boulevard parking, the Transportation and Works Department recommends implementing lower driveway boulevard parking between the curb and sidewalk, at any time, on Forestwalk Circle.

The Ward Councillor supports the proposal for lower driveway boulevard parking. The existing on-street parking regulations will be maintained.

Originators files: MG.23.REP
RT.10.Z-36W

Financial Impact

Costs for the sign installation can be accommodated in the 2018 operating budget.

Conclusion

Based on the results of the questionnaire, the Transportation and Works Department supports lower driveway boulevard parking between the curb and sidewalk, on Forestwalk Circle.

Attachments

Appendix 1: Location Map - Lower Driveway Boulevard Parking - Forestwalk Circle

Geoff Wright, P. Eng., MBA, Commissioner of Transportation and Works

Prepared by: Haydn Kocznur, Road Safety Technician

MISSISSAUGA

Transportation and Works

Works Operations & Maintenance

LOWER DRIVEWAY BOULEVARD PARKING
Forestwalk Circle
Ward 5

SCALE FOR REDUCED DRAWINGS
0m 25m 50m 100m 150m 200m 250m 500m

City of Mississauga

Corporate Report

MISSISSAUGA

Date: 2018/01/30

To: Chair and Members of General Committee

From: Geoff Wright, P. Eng., MBA, Commissioner of Transportation and Works

Originator's files:
MG.23.REP
RT.10.Z-36W

Meeting date:
2018/02/14

Subject

Lower Driveway Boulevard Parking - Delaware Drive (Ward 5)

Recommendation

That a by-law be enacted to amend the Traffic By-law 555-00, as amended, to implement lower driveway boulevard parking between the curb and sidewalk, at any time on both sides of Delaware Drive between Eglinton Avenue East and Nahani Way, as outlined in the report from the Commissioner of Transportation and Works, dated January 30, 2018, entitled "Lower Driveway Boulevard Parking - Delaware Drive (Ward 5)".

Background

The Transportation and Works Department received a completed petition from an area resident to implement lower driveway boulevard parking on both sides of Delaware Drive between Eglinton Avenue East and Nahani Way. Lower driveway boulevard parking between the curb and sidewalk is currently prohibited and five-hour parking is permitted on Delaware Drive. A location map is attached as Appendix 1.

Comments

To determine the level of support for lower driveway boulevard parking between the curb and sidewalk, a parking questionnaire was distributed to the residents of Delaware Drive.

11 questionnaires were delivered and nine (82%) were returned; eight (89%) supported the implementation of lower driveway boulevard parking and one (11%) was opposed. Since greater than 66% of the total respondents support lower driveway boulevard parking, the Transportation and Works Department recommends implementing lower driveway boulevard parking between the curb and sidewalk, at any time, on both sides of Delaware Drive between Eglinton Avenue East and Nahani Way.

The Ward Councillor supports the proposal for lower driveway boulevard parking. The existing on-street parking regulations will be maintained.

Financial Impact

Costs for the sign installation can be accommodated in the 2018 operating budget.

Conclusion

Based on the results of the questionnaire, the Transportation and Works Department supports lower driveway boulevard parking between the curb and sidewalk, on both sides of Delaware Drive between Eglinton Avenue East and Nahani Way.

Attachments

Appendix 1: Location Map - Lower Driveway Boulevard Parking - Delaware Drive

Geoff Wright, P. Eng., MBA, Commissioner of Transportation and Works

Prepared by: Haydn Kocznur, Road Safety Technician

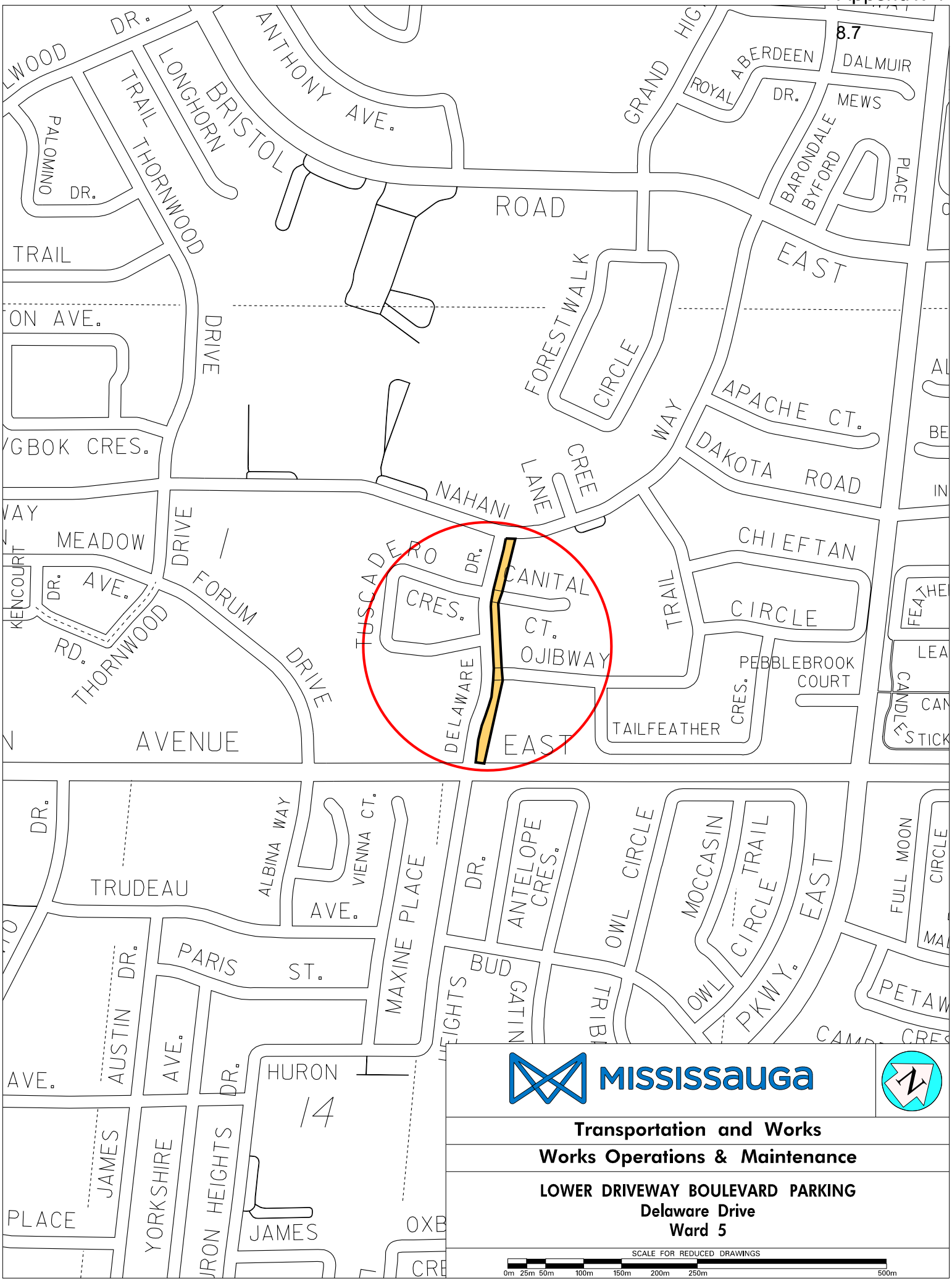
ANTHONY AVE.
BRISTOL
LONGHORN
TRAIL
THORNWOOD
PALOMINO
DR.
GRAND
ABERDEEN
ROYAL
DR.
DALMUIR
MEWS
BARONDALE
BYFORD
PLACE
ROAD
EAST
FOREST WALK
CIRCLE
APACHE CT.
DAKOTA ROAD
WAY
CREE
LANE
NAHANI
DRIVE
MEADOW
AVE.
KENCOURT
DR.
RD.
THORNWOOD
FORUM
DRIVE
TUSCADERO
DR.
CRES.
CANITAL
CT.
OJIBWAY
DELAWARE
EAST
TRAIL
CHIEFTAN
CIRCLE
PEBBLEBROOK
COURT
CRES.
TAILFEATHER
AVENUE
TRUDEAU
ALBINA WAY
VIENNA CT.
AVE.
MAXINE PLACE
PARIS
ST.
DR.
ANTELOPE
CRES.
OWL CIRCLE
MOCCASIN
TRAIL
CIRCLE
EAST
PKWY.
FULL MOON
CIRCLE
BUD
GATIN
AUSTIN
DR.
AVE.
HURON
14
JAMES
YORKSHIRE
HURON HEIGHTS
PLACE
JAMES
OXB
CRE
PETAW
CAMP. CRES
MISSISSAUGA
Transportation and Works
Works Operations & Maintenance
LOWER DRIVEWAY BOULEVARD PARKING
Delaware Drive
Ward 5
SCALE FOR REDUCED DRAWINGS
0m 25m 50m 100m 150m 200m 250m 500m

City of Mississauga
Corporate Report

MISSISSAUGA

Date: 2018/01/25 To: Chair and Members of General Committee From: Geoff Wright, P. Eng, MBA, Commissioner of Transportation and Works	Originator's files: Meeting date: 2018/02/14

Subject
Remediation and Indemnity Agreements for 1715 Bloor Street and 2163 Dundas Street East (Ward 3)

Recommendation
That a by-law be enacted authorizing the Commissioner of Transportation and Works and the City Clerk to execute and affix the corporate seal to Remediation and Indemnity Agreements, and subsequent amending agreements and/or ancillary documents, between the City of Mississauga and Shell Canada Limited, as owner of 1715 Bloor Street and 2163 Dundas Street East, to permit Shell Canada Limited to undertake investigative and remedial work for addressing petroleum hydrocarbon impacts in soil and groundwater within the City road allowances (Bloor Street, Fieldgate Drive, and Dundas Street East) in form and content satisfactory to the City Solicitor.

Background
The properties located at 1715 Bloor Street ("1715 Bloor") and at 2163 Dundas Street East ("2163 Dundas"), illustrated in Appendix 1, are both owned and operated by Shell Canada Limited ("the Owner") as service stations since the late and early 1960s, respectively.

Contamination from these properties has impacted adjacent City-owned road allowances ("City road allowance(s)").

<u>1715 Bloor Street</u>

In 2006, in preparation for site redevelopment, the Owner undertook environmental investigations. The results of the investigations indicated that petroleum hydrocarbons were present in soil and groundwater on both the service station site and in the City road allowances, namely Bloor Street and Fieldgate Drive. The Owner subsequently duly notified both the City and the Technical Standards and Safety Authority ("TSSA") regarding the presence of off-site contamination originating from its property.

This property has since been subject to a Contaminant Management Plan ("CMP") approved by the TSSA. In accordance with its approved CMP, the Owner has been undertaking a remediation program via vacuum extraction and a semi-annual groundwater monitoring program that includes monitoring wells installed within the City road allowances, which is currently ongoing.

As of August 2017, concentrations of several petroleum-related chemical parameters are still being detected in groundwater that exceed the Ministry of the Environment and Climate Change ("MOECC") 2011 applicable Site Condition Standards at two off-site monitoring wells within the City road allowances.

2163 Dundas Street East

In 2011, in preparation for site redevelopment, the Owner undertook environmental investigations and petroleum-related contamination was discovered in soil and groundwater that exceeded applicable MOECC Site Condition Standards on the service station site, including those lands to be dedicated to the City for road widening along Dundas Street East.

As a condition of Site Plan Approval, the Owner executed a Site Plan Undertaking and Covenant in 2012. This undertaking obligated the Owner to carry out certain remedial works on its property and within the lands to be dedicated to the City. The undertaking further obligated the Owner to enter into an Indemnity and Remediation Agreement, and to develop a CMP if required.

The Owner remediated its property, including the lands to be dedicated to the City, in accordance with the Site Plan Undertaking and Covenant and in 2015, the land transfer for the road widening was completed. However, notwithstanding the City's acceptance of the dedicated lands, residual soil contamination was identified along the outer edge of the southern boundary of these lands, adjacent to the existing Dundas Street East road allowance. The Owner was unable to further investigate the extent of the contamination that may have migrated beneath the roadway due to the presence of underground utilities. However, in consultation with City staff, the Owner developed an alternate plan to evaluate the potential risk associated with the residual contamination, and to review the need for a CMP.

In August 2017, two groundwater monitoring wells were installed on the opposite side of the Dundas Street East road allowance. Results from groundwater monitoring indicated that all parameters were below applicable MOECC standards. These results, along with the residual soil contamination findings, were included in a Risk Evaluation report prepared in late 2017 on behalf of the Owner to assess the potential risks of residual soil and groundwater contamination remaining within the road allowance. The report concluded that direct contact with residual contaminated groundwater by workers conducting subsurface intrusive activities within the City road allowance represented a potential unacceptable health risk. The Owner's consultant indicated that such risks could be addressed through a health and safety plan and also

recommended that no further delineation, remediation or monitoring work would be required and thus a CMP would not be necessary. City staff concurs with the recommendations and have since requested the Owner to submit a health and safety plan to address residual contamination risks to workers and to provide reliance on all reports concerning the road allowance. This request remains pending.

Comments

The Owner has agreed to negotiate and enter into Remediation and Indemnity Agreements ("Agreements") for the 1715 Bloor and 2163 Dundas road allowances with the City. It would be of benefit to the City to negotiate and enter into these Agreements. The Agreements will commit the Owner to continue the additional work required to address the contamination in the City road allowances at the Owner's cost and to reimburse the City for any incremental costs that may be incurred by the City in connection with the contamination, should any work be required within the City road allowances. This, in turn, will reduce any potential liability to the City with respect to claims that the contamination may impact workers during subsurface intrusive activities for maintenance, replacement or repair of underground utilities within the City road allowances.

Financial Impact

There will be no financial impact to the City for entering into the Agreements. If the Agreements are not entered into, the City may incur costs associated with pursuing environmental investigations to delineate and remediate contamination within City road allowances and costs incurred due to any claims brought against the City relating to the contamination.

Conclusion

Petroleum-related contamination has been identified within the City's road allowances adjacent to two Shell Canada service stations. Executing Remediation and Indemnity Agreements between the City and Shell Canada Ltd. will be advantageous to the City to improve the environmental conditions and reduce the City's liability associated with the City road allowances. The Agreements will commit the Owner to continue its obligations to address contamination issues and ensure protection to the public and workers.

Attachments

Appendix 1: 1715 Bloor Street and 2163 Dundas Street East Location Map

Geoff Wright, P. Eng., MBA, Commissioner of Transportation and Works

Prepared by: Imshun Je, P.Geo., Manager, Environmental Site Management and Compliance

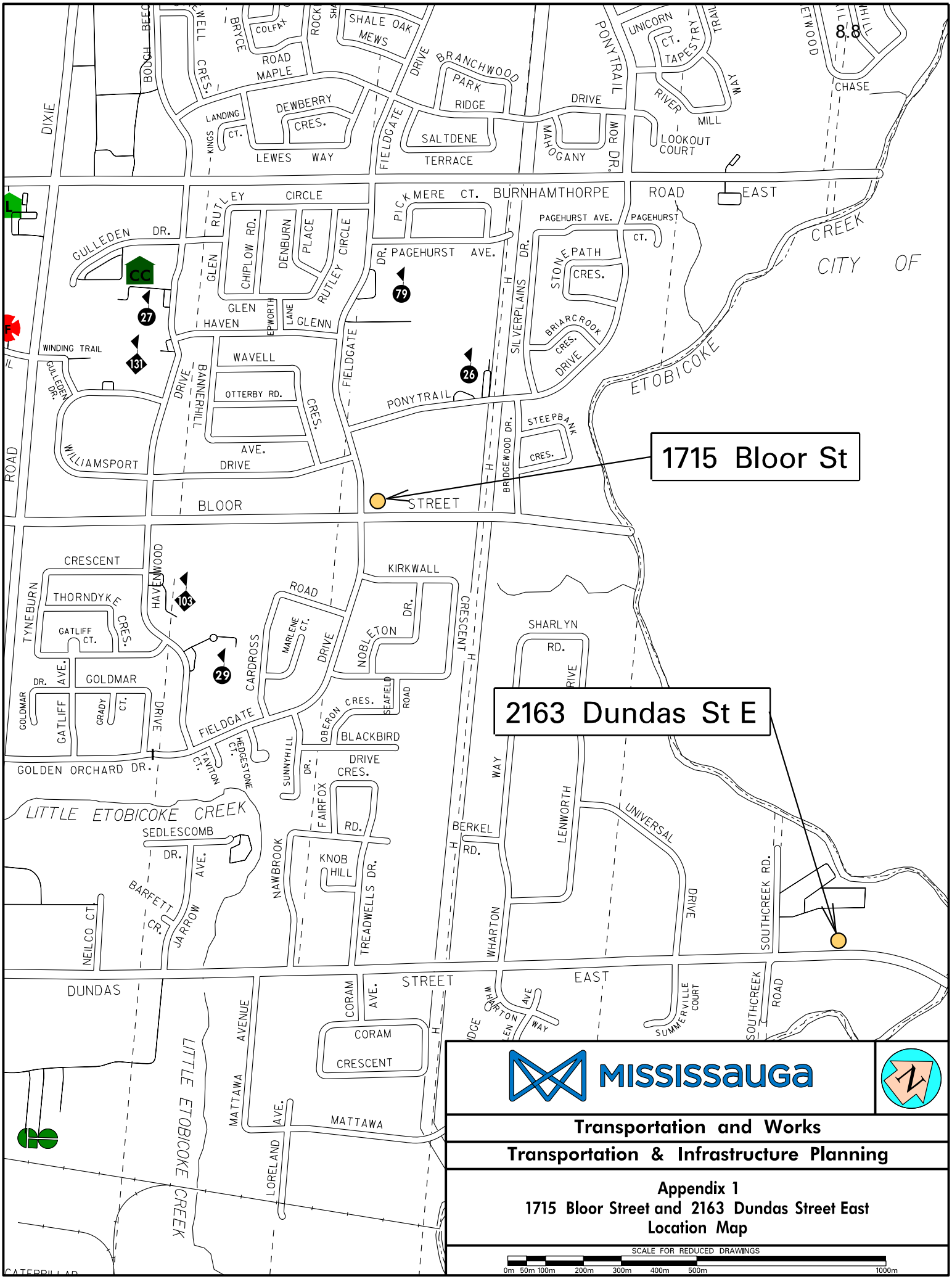
1715 Bloor St
2163 Dundas St E
BLOOR STREET
DUNDAS STREET EAST
BURNHAMTHORPE ROAD EAST
CITY OF ETOBICOKE
LITTLE ETOBICOKE CREEK
DIXIE ROAD
PONYTRAIL DRIVE
FIELDGATE DRIVE
SILVERPLAINS DR.
BRIDGEWOOD DR.
WHARTON WAY
LENWORTH DRIVE
UNIVERSAL DRIVE
SOUTHCREEK RD.
SOUTHCREEK ROAD
MATTAWA AVENUE
CORAM CRESCENT
MISSISSAUGA
Transportation and Works
Transportation & Infrastructure Planning
Appendix 1
1715 Bloor Street and 2163 Dundas Street East
Location Map
SCALE FOR REDUCED DRAWINGS
0m 50m 100m 200m 300m 400m 500m 1000m

City of Mississauga

Corporate Report

MISSISSAUGA

Date: 2018/01/25	Originator's files:
To: Chair and Members of General Committee	
From: Geoff Wright, P. Eng., MBA, Commissioner of Transportation and Works	Meeting date: 2018/02/14

Subject

Request to Increase Contract Upset Limit with HDR Corporation for Contract Administration Services for three Bridge Structures, Procurement No. FA.49.277-16 (Wards 5, 6, 7 and 8)

Recommendation

That the Purchasing Agent be authorized to increase the contract with HDR Corporation (Procurement No. FA.49.277-16) to include additional Contract Administration services for three bridge structures by an additional amount of $158,000, to a revised total contract value of $414,587 (excluding taxes).

Background

In early 2016, the City retained HDR Corporation (HDR) through a competitive bid process (Procurement No. FA.49.277-16) for engineering services to undertake three phases of work (Detailed Condition Surveys, Detailed Design and, provisionally, Contract Administration during construction), related to the structural rehabilitation of the following three bridge structures:

- Dundas Street West over the Credit River, Westbound - #017002WB (Appendix 1)
- Dundas Street West over the Credit River, Eastbound - #017002EB (Appendix 1)
- Matheson Boulevard East over Etobicoke Creek - #034000 (Appendix 2)

Subsequently, increases were made to the contract for a geotechnical investigation of the Dundas Street West bridge structures, and for condition and geotechnical investigations of the storm drainage systems and retaining walls along Dundas Street West, just east of the bridges over the Credit River (Appendix 1). This work, as well as the detailed condition surveys and designs for the bridge structures has been completed, and the project is ready to proceed to the construction phase this spring. The construction work to address the retaining walls and storm drainage issues has been budgeted for separately, and will be included in the Dundas Street West Road Improvement Project (between Mississauga Road and The Credit Woodlands), currently scheduled for 2019.

As will be shown in this report, the engineering fees for the contract administration services for the project will be greater than what was initially bid by HDR for this provisional contract item. This report is seeking authority from Council to increase the contract amount with HDR, in accordance with By-law 374-2006.

Comments

Upon completion of the Detailed Design phase, it was determined that the construction work for the Dundas Street West westbound structure (#017002WB) would be significantly more complex than originally contemplated during the procurement process, and that the construction period would be approximately 41 weeks, as opposed to the original estimated duration of 15 weeks. This is primarily due to the bridge requiring a widening of the westbound sub-structure to accommodate the construction of a new cycling facility on the bridge, in conjunction with the rehabilitation work. This cycling infrastructure was identified in the Mississauga Cycling Master Plan and will provide an important connection in the network. As a result, additional services will be required from HDR during the Contract Administration phase of the project, to ensure the construction work is completed to the City's satisfaction.

Financial Impact

The existing and revised contract amounts are summarized in Table 1, below:

Table 1: Existing and Revised Contract Amounts

Contract Item	Original Value	Change Order #1	Cost for Additional Work	Revised Upset Limit
Phase 1 - Detailed Condition Survey	$36,865	-	-	$36,865
Phase 2 - Detailed Design	$56,910	-	-	$56,910
Phase 3 - Contract Administration	$42,812	-	$107,245	$150,057
Dundas Street West retaining wall and drainage system assessment	-	$85,530	-	$85,530
Contingency	$30,000	$4,470	$50,755	$ 85,225
Totals	**$166,587**	**$90,000**	**$158,000**	**$414,587**

The Capital Budget for this project, PN16-151, has sufficient funds available to accommodate the proposed increase to the contract. No additional funding is required.

Conclusion

An increase to the existing contract with HDR Corporation is required for the additional contract administration services that were identified during the Detailed Design phase of the project.

The contract with HDR was established competitively. The HDR contract continues to represent good value and is sufficiently resourced to accommodate this additional work. Council approval is required, as this increase will exceed 20% of the original contract value.

Attachments

Appendix 1: Dundas Street West Structures, Retaining Walls and Storm Drainage Location Map

Appendix 2: Matheson Boulevard East Structure Location Map

Geoff Wright, P. Eng., MBA, Commissioner of Transportation and Works

Prepared by: Loudel Uy, Transportation Infrastructure Coordinator

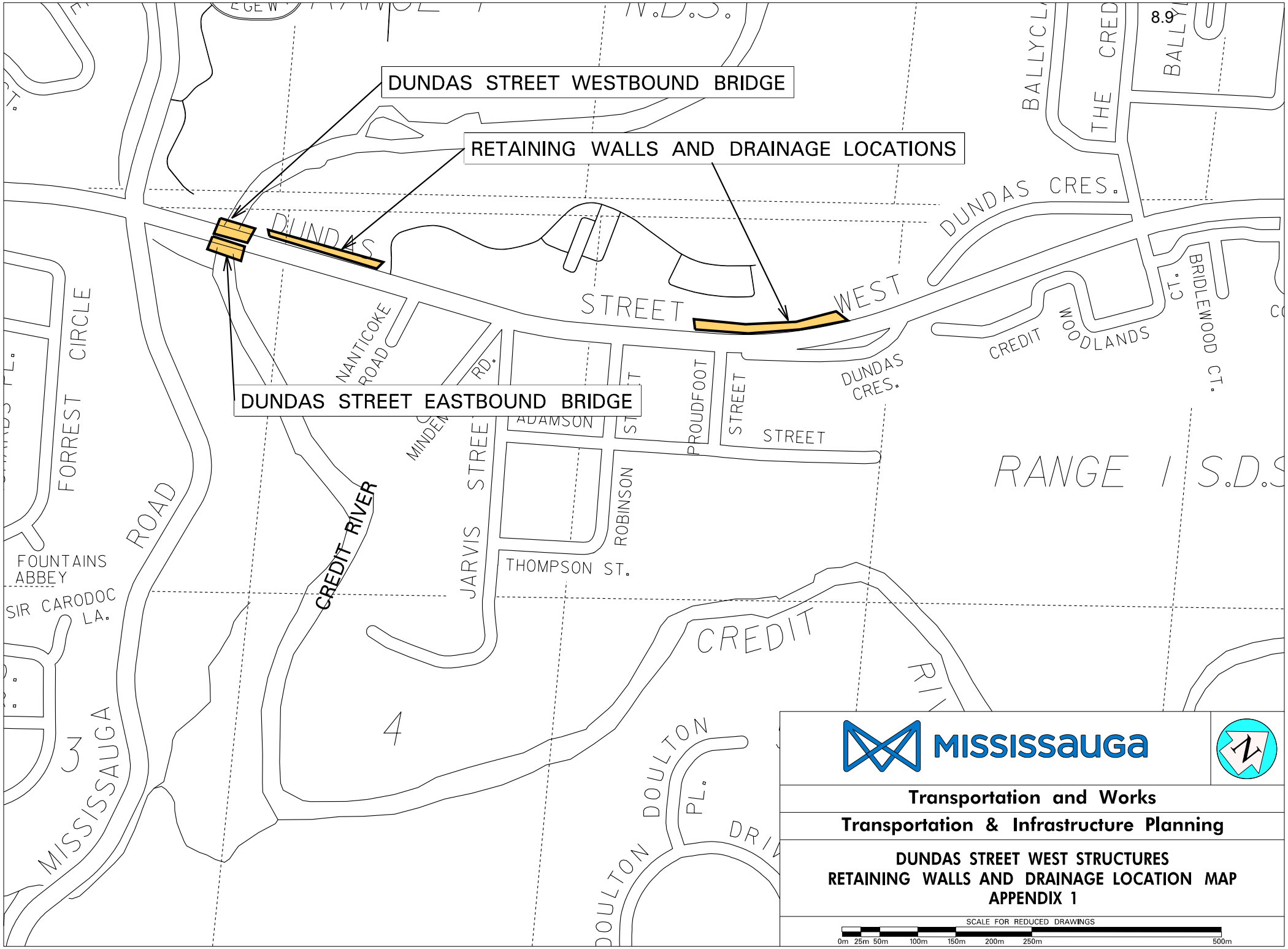
DUNDAS STREET WESTBOUND BRIDGE
RETAINING WALLS AND DRAINAGE LOCATIONS
DUNDAS STREET EASTBOUND BRIDGE
DUNDAS STREET WEST
DUNDAS CRES.
BALLYCL
THE CRED
BALLY
NANTICOKE ROAD
MINDEN RD.
ADAMSON
PROUDFOOT
STREET
STREET
CREDIT WOODLANDS
BRIDLEWOOD CT.
FORREST CIRCLE
ROAD
CREDIT RIVER
JARVIS STREET
ROBINSON
THOMPSON ST.
FOUNTAINS ABBEY
SIR CARODOC LA.
RANGE 1 S.D.S
CREDIT
DOULTON PL.
DOULTON DRIV
MISSISSAUGA
4
3
MISSISSAUGA
Transportation and Works
Transportation & Infrastructure Planning
DUNDAS STREET WEST STRUCTURES
RETAINING WALLS AND DRAINAGE LOCATION MAP
APPENDIX 1
SCALE FOR REDUCED DRAWINGS
0m 25m 50m 100m 150m 200m 250m 500m

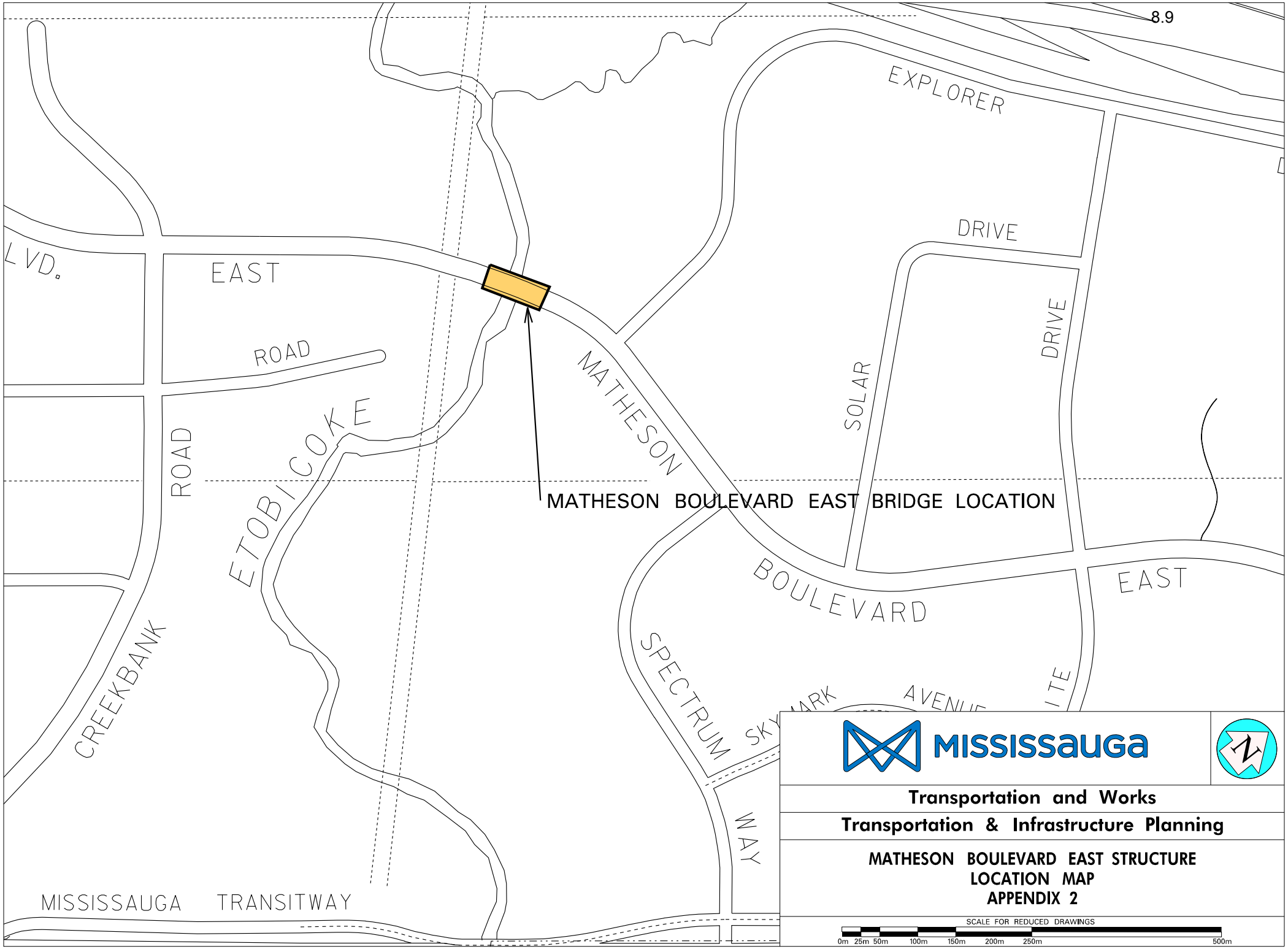
EXPLORER
DRIVE
LVD.
EAST
ROAD
MATHESON
SOLAR
DRIVE
ETOBICOKE
ROAD
MATHESON BOULEVARD EAST BRIDGE LOCATION
BOULEVARD
EAST
CREEKBANK
SPECTRUM
WAY
MISSISSAUGA TRANSITWAY
MISSISSAUGA
Transportation and Works
Transportation & Infrastructure Planning
MATHESON BOULEVARD EAST STRUCTURE
LOCATION MAP
APPENDIX 2
SCALE FOR REDUCED DRAWINGS
0m 25m 50m 100m 150m 200m 250m 500m

City of Mississauga

Corporate Report

MISSISSAUGA

Date: 2018/01/16 To: Chair and Members of General Committee From: Geoff Wright, P. Eng., MBA, Commissioner of Transportation and Works	Originator's files: 43M-1974 Meeting date: 2018/02/14

Subject

Assumption of Municipal Works – Registered Plan 43M-1974 - Agro Park Subdivision, Phase 2 - Agro Park II Corp. (Ward 10)

Recommendation

1. That the City of Mississauga assume the municipal works as constructed by the developer under the terms of the Servicing Agreement for 43M-1974, Argo Park II Corp., (lands located north of Tacc Drive, east of Tenth Line West and west of Oscar Peterson Boulevard, in Z-57, known as Argo Park Subdivision, Phase 2).

2. That the Letter of Credit in the amount of $200,000.00 be returned to the developer.

3. That a by-law be enacted to assume the road allowances within the Registered Plan as public highway and part of the municipal system of the City of Mississauga.

   43M - 1974 (Ward 10)

Background

The developer identified on the attached Table of Assumptions (Appendix 1) has complied with all the requirements of the identified Servicing Agreement.

Comments

The Transportation and Works Department supports the assumption of the municipal works associated with Registered Plan 43M – 1974.

Financial Impact

With the assumption of the Argo Park Subdivision, Phase 2, the City will now be required to provide maintenance to 63 meters (207 feet) of roadway and 91 meters (299 feet) of storm sewer.

Conclusion

It is in order for the City to assume the municipal works within the site identified on the attached Table of Assumptions (Appendix 1).

Attachments

Appendix 1: Table of Assumptions

Appendix 2: Approximate location of 43M-1974

Geoff Wright, P. Eng., MBA, Commissioner of Transportation and Works

Prepared by: John King, Supervisor of Development Construction

APPENDIX 1

TABLE OF ASSUMPTIONS				
PLAN/FILE REFERENCE #	**LOCATION**	**DEVELOPER ADDRESS**	**SERVICING AGREEMENT DATE**	**SECURITIES TO BE RELEASED**
43M-1974	North of Tacc Drive, east of Tenth Line West and west of Oscar Peterson Boulevard, in Z-57.	Argo Park II Corp. 8600 Dufferin Street, Vaughan, Ontario, L4K 5P5 Attn: Mr. T.S. Kim, Director-Special Projects	October 29, 2014	$200,000.00 Cancel Insurance

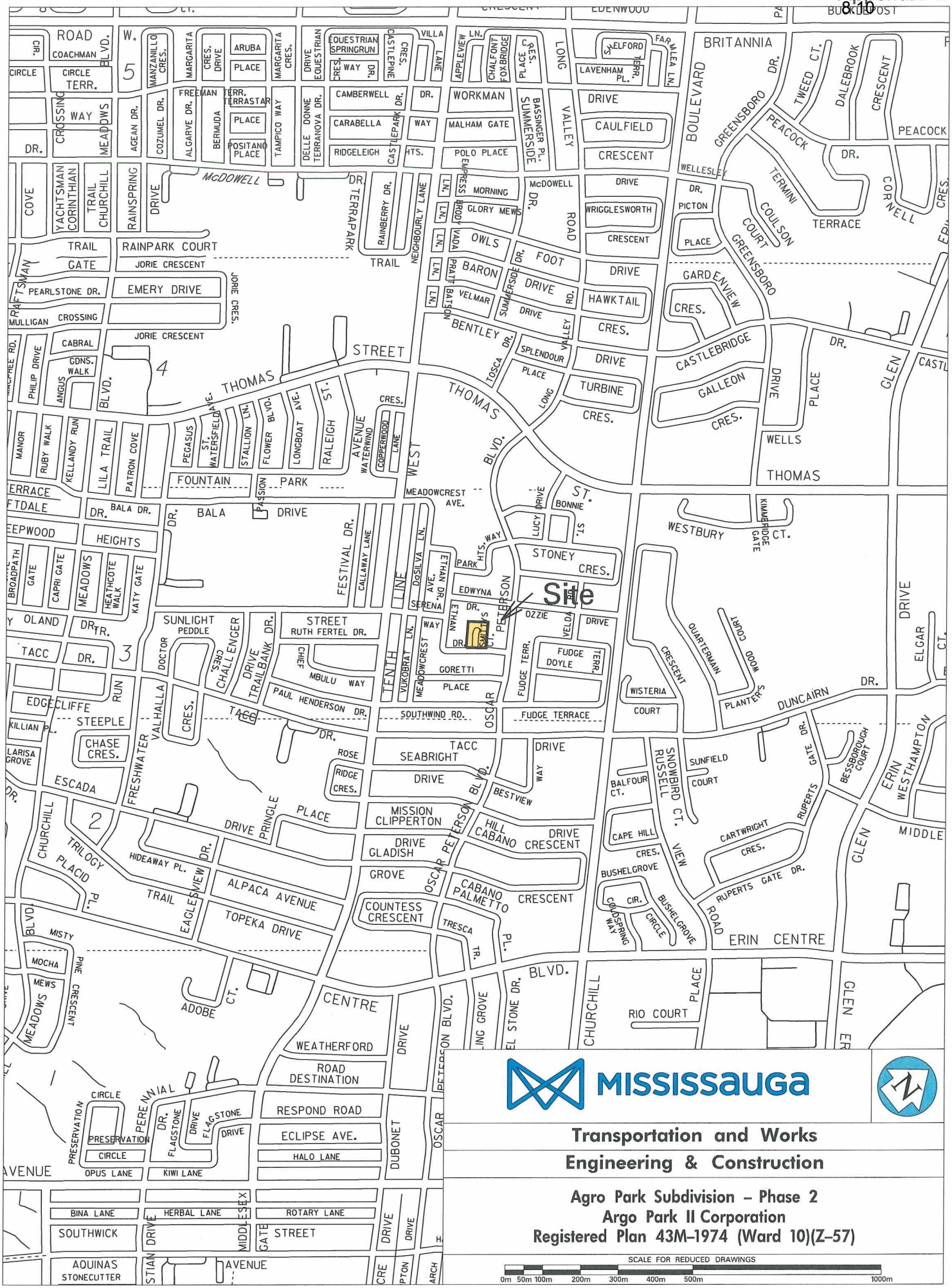
Site
McDOWELL
THOMAS
STREET
WEST
TENTH LINE
OSCAR PETERSON BLVD.
MISSISSAUGA
Transportation and Works
Engineering & Construction
Agro Park Subdivision – Phase 2
Argo Park II Corporation
Registered Plan 43M-1974 (Ward 10)(Z-57)
SCALE FOR REDUCED DRAWINGS
0m 50m 100m 200m 300m 400m 500m 1000m

City of Mississauga

Corporate Report

MISSISSAUGA

Date: 2018/01/30	Originator's files:
To: Chair and Members of General Committee	
From: Geoff Wright, P. Eng., MBA, Commissioner of Transportation and Works	Meeting date: 2018/02/14

Subject

Changes to Tow Truck Licensing By-law 521-04, as amended, to Include "Bill 15, Fighting Fraud and Reducing Automobile Insurance Rates Act" Requirements

Recommendation

1. That a by-law be enacted to amend the Business Licensing By-law 01-06, as amended, to include Bill 15, Fighting Fraud and Reducing Automobile Insurance Rates Act Requirements, to require that vehicle pound facilities:

   a. Accept multiple forms of payment including cash, credit card and debit card.

   b. Maintain appropriate insurance.

   c. Permit the entry of vehicle owners or their representatives to remove private property from their impounded vehicles.

   d. Disclose to consumers any direct or indirect relationship with a towing provider or vehicle repair facility.

2. That a by-law be enacted to amend the Tow Truck Licensing By-law 521-04, as amended, to include *Bill 15, Fighting Fraud and Reducing Automobile Insurance Rates Act* Requirements, and to require that towing providers provide disclosure to consumers of direct or indirect relationship with a storage provider or vehicle repair facility as outlined in the report from Commissioner of Transportation and Works, dated January 30, 2018 entitled *"Changes to Tow Truck Licensing By-law 521-04, as amended, to Include "Bill 15, Fighting Fraud and Reducing Automobile Insurance Rates Act"* Requirements.

Report Highlights

- At its meeting of December 4, 2017, the Towing Industry Advisory Committee (TIAC) considered a staff report related to the enactment of a by-law to amend the Tow Truck Licensing By-law 521-04, as amended, and the Business Licensing By-law 1-06, as amended, to include Bill 15, Fighting Fraud and Reducing Automobile Insurance Rates Act

Requirements.

- A number of amendments were identified dealing with issues such as forms of payment, insurance and disclosure to the public are recommended to more closely align the By-law with the provincial legislation.

Background

At its meeting of December 13, 2017 Council approved the following recommendations:

"Resolution No: 0241-2017

> *"That Recommendations TIAC-0009-2017 to TIAC-0014-2017 inclusive contained in Towing Industry Advisory Committee Report 3-2017 dated December 4, 2017, be approved."*

Comments

At its meeting of December 4, 2017 the Towing Industry Advisory Committee (TIAC) approved the staff recommendations in Resolution No. 0241-2017. Further, the TIAC did not provide any comments on the report.

A summary of the requirements for these changes is provided below. This summary includes information taken directly from the report dated November 10, 2017 entitled "Amendments to Tow Truck Licensing By-law 521-04, as amended, to include *"Bill 15, Fighting Fraud and Reducing Automobile Insurance Rates Act"* Requirements.

As part of the recommendation of General Committee held March 3, 2016, staff were directed to:

> *"GC -0160-2016*
>
> *That Council amend the Tow Truck Licensing By-law 0521-2004, as amended, and Schedule 27 of Business Licensing By-law 0001-2006, as amended, to implement the Additional Regulations and Operating Procedures Alternative Option to a City owned and operated Centralized Vehicle Pound Facility to improve consumer protection, ensure that City By-laws conform with Provincial Bill 15 - Fighting Fraud and Reducing Automobile Insurance Rates Act regulations, and to improve the City's monitoring and auditing capabilities of the vehicle towing and storage industry"*

On March 21, 2017 staff presented a report to the Towing Industry Advisory Committee (TIAC) entitled "Changes to the Tow Truck Licensing By-law 521-04, as amended, for Requirements to Accept All Forms of Payments for Towing Services". This report was received by TIAC and the following recommendation was made:

"TIAC-0001-2017

That the Towing Industry Advisory Committee provide comments to staff, for inclusion in a future report to General Committee, on the report from the Commissioner of Transportation and Works dated March 13, 2017 and entitled "Changes to the Tow Truck Licensing By-law 521-04, as amended, for Requirements to Accept All Forms of Payment for Towing Services".

Amendments to the Consumer Protection Act contained in Bill 15 became effective on January 1, 2017 and include a number of requirements that affect Towing and Vehicle Storage providers. To date, comments from TIAC have not yet been received by staff.

The following is a summary of the changes and the corresponding staff recommendations:

Tow and storage providers are required to accept multiple payment methods for services provided including cash, credit cards or other prescribed methods.

As identified previously, the issue of multiple forms of payment for tow truck operators has been addressed through a separate report.

With regards to the requirement that the storage provider also accept multiple forms of payment, the Business Licensing By-law is silent on this issue. While staff have identified that there have been few complaints from the public regarding this issue, an amendment to the By-law to align it with the requirements of Bill 15 is recommended.

Towing and storage providers are required to maintain appropriate liability insurance.
The Tow Truck Licensing By-law contains detailed requirements as to the types and amounts of insurance that are required to be licenced. It also contains requirements that the Mobile Licensing Manager be provided with ten days' notice in writing of any changes to a Licensee's insurance.

The Business Licensing By-law does not currently contain requirements for vehicle pound facilities to maintain insurance. It is therefore recommended that the By-law be amended to address this requirement.

Unless directed otherwise by a police officer, the towing and storage provider must provide the consumer, or their agent, access to the vehicle that is subject to the towing or storage service in order to permit the removal or personal property upon the request of the consumer or their agent.

The Business Licensing By-law does not require that access be provided to the vehicle owner or their agent to retrieve personal property from the vehicle being stored. Staff recommend that the By-law be amended to meet this requirement, and that vehicle pound facilities be permitted to charge an additional nominal fee for this service.

Towing and storage providers are required to disclose to the consumer any direct or indirect interest, including the nature and extent of the interest, in a facility to which a vehicle may be towed for storage, repair or appraisal.

Neither the Tow Truck Licensing By-law nor the Business Licensing By-law contains requirements that a relationship between a tow and storage provider and a repair facility be disclosed to a consumer.
The Tow Truck By-law does require that tow truck owners notify the Manager of Mobile Licensing of any direct or indirect interest in a vehicle pound, body shop or any other public garage. It is therefore recommended that both By-laws be amended to address this requirement.

Towing service providers are required to inform consumers of the associated costs of the service prior to engaging in the service.

The required information includes the name of the tow provider, the names used to carry on business, phone number, schedule of rates, the location to which the vehicle is being towed, and a requirement that a written invoice be provided.

The City of Mississauga utilizes a Permission to Tow Form as required by the Tow Truck Licensing By-law 521-04, as amended. The document provides the consumer with information regarding the tow operator and company, the municipal and provincial plate numbers and information regarding their rights as consumers. Tow operators are further required to file a schedule of rates with Mobile Licensing for non-collision towing, while the tow rate for collisions and the rate that may be charged for vehicle storage is regulated by the City and identified in the Tow Truck and Business Licensing By-laws. In light of this, staff have identified that the by-laws are consistent with the requirements of Bill 15.

Towing and storage service providers are required to obtain appropriate authorization from the consumer prior to charging for any service.

The Tow Truck Licensing By-law currently requires that a Permission to Tow form be completed prior to each tow; a form that outlines the consumer's options under the By-law. The By-law also identifies situations where authorization is not required.

Towing and storage providers shall post pricing information and other information as required.

Towing providers are required to operate in accordance with their individual schedule of rates that is maintained on file at the Mobile Licensing office. Collision rates are established through the Tow Truck Licensing By-law. Other information to be maintained on the tow vehicle itself is prescribed in the By-law and includes the name and telephone number of the business as shown on the tow truck owner's licence.

The Business Licensing By-law requires that storage providers also provide signage indicating the storage rate, hours of operation and telephone numbers for after-hours vehicle release.

Unless regulated otherwise, towing and storage providers will supply the consumer with an invoice detailing the tow and storage services provided and include an itemized list of the services with the cost of each and the total.

Requirements within the Towing By-law to supply the consumer with a copy of the Permission to Tow Form adhere to the prescribed rate for collision towing and adhere to the rates as filed with the Mobile Licensing office provides enhanced consumer protection in this area. The By-law also requires that each driver track daily activity through a log book or the maintenance of bills and invoices that have been issued.

The Business Licensing By-law requires that the vehicle pound facility provide an invoice to the vehicle owner or their agent before any demand for payment is made.

Towing and storage providers must maintain a current schedule of rates charged which is publicly available.

The Tow Truck Licensing By-law currently requires adherence to a set rate for collision towing and the filing of a schedule of rates with Mobile Licensing, which are available to the public. The storage of vehicles is also subject to a rate defined within the Business Licensing By-law, this rate is required to be posted by the vehicle pound operator.

Towing and storage providers may not charge fees that exceed the published rates for the service merely because the costs are being paid by an insurer or other third party.

By-law requirements prescribing the amounts that may be charged for a tow resulting from a vehicle collision for the storage of vehicles, and for adherence to the schedule of rates that has been filed with Mobile Licensing has effectively eliminated this as a consideration."

Financial Impact

No direct financial impact would be experienced by the City of Mississauga.

Conclusion

Staff consulted with members of the towing industry on including *Bill 15, Fighting Fraud and Reducing Automobile Insurance Rates Act* requirements. In addition, staff brought forward a report to TIAC on this matter for comments. The report was subsequently approved by TIAC and no comments were provided by TIAC on the report.

As a result, staff are recommending that a by-law be enacted to amend the Tow Truck Licensing By-law 521-04, as amended, to include Bill 15 requirements, as outlined in this report.

Geoff Wright, P. Eng., MBA, Commissioner of Transportation and Works

Prepared by: Michael Foley, Manager, Mobile Licensing Enforcement

City of Mississauga
Corporate Report

MISSISSAUGA

Date: 2018/01/30	Originator's files:
To: Chair and Members of General Committee	
From: Geoff Wright, P. Eng, MBA, Commissioner of Transportation and Works	Meeting date: 2018/02/14

Subject
Changes to the Tow Truck Licensing By-law 521-04, as amended, for Requirements to Accept All Forms of Payment for Towing Services

Recommendation
That a by-law be enacted to amend the Tow Truck Licensing By-law 0521-2004, as amended, to require that towing providers accept multiple forms of payment including cash, credit card and debit card as outlined in the report from the Commissioner of Transportation and Works, dated January 30, 2018 and entitled "Changes to the Tow Truck Licensing By-law 521-04, as amended, for Requirements to Accept All Forms of Payment for Towing Services".

Background
At its meeting of April 12, 2017, Council approved the following recommendation:

> *"GC-0198-2017*
>
> *That the Towing Industry Advisory Committee provide comments to staff, for inclusion in a future report to General Committee, on the report from the Commissioner of Transportation and Works dated March 13, 2017 and entitled "Changes to the Tow Truck Licensing By-law 521-04, as amended, for Requirement to Accept All Forms of Payment for Towing Services".*

The purpose of this report is to respond to GC-0198-2017.

Comments
At its meeting of March 21, 2017 the Towing Industry Advisory Committee (TIAC) considered the recommendation in GC-0198-2017. Further, TIAC did not provide any comments on the report.

A summary of the requirements for this change is provided below. This summary includes information taken directly from the report mentioned in the preceding paragraph.

"Staff have received numerous complaints regarding tow truck drivers refusing to accept payments except in the form of cash for the release of a towed vehicle. In some circumstances, tow truck drivers demand cash. Further, if the person does not have cash on hand, tow truck drivers insist that they drive the customer to an ATM bank machine before agreeing to release the vehicle. This has resulted in complaints from consumers that they felt uneasy, intimidated and held at the mercy of the tow truck river.

Staff have received other complaints from persons not having access to cash and requiring the use of a credit card at which time the tow truck driver refuses to accept the card and insists that the vehicle be taken to their vehicle pound facility until the person has the ability to provide a cash payment. This has resulted in additional charges for storage and re-tows fees.

Staff are not in a position to provide assistance on the complaints received because the Tow Truck Licensing By-law 521-04, as amended, does not include provisions to address requirements for accepting various types of payments for services. While it is possible to lay charges for failing to accept various types of payments, it is not supported by the courts due to the lack of clarity in the by-law.

Reports were brought forward at the TIAC meetings of May 17, 2016 and September 20, 2016 recommending the amendments to the by-law to ensure the City met requirements of the Consumer Protection Act.

Under Bill 15, the province amended the Consumer Protection Act and its regulations to include a requirement that all tow truck drivers and owners shall accept all forms of payments. The changes went into effect on January 1, 2017.

The TIAC committee did not support the amendments due to the cost of point of sale (POS) machines and other fees such as debit and credit cards.

The Consumer Protection Act became effective on January 1, 2017 requiring all tow truck drivers and owners to accept all forms of payment. City staff have continued to receive complaints that tow truck drivers are demanding cash and refusing to release vehicles. The municipality has a responsibility to meet the requirements of the provincial legislation in order to justify maintaining a municipal licensing regime.

Staff are of the opinion that an amendment of the by-law requiring tow truck drivers and owners take the appropriate steps to accept all forms of payments is appropriate. The responsibility to determine software and/or equipment should be left to the tow truck owner and that the process to be used shall be filed with Mobile Licensing and approved by the Licence Manager.

At the December 4, 2017 meeting of the Towing Industry Advisory Committee, committee members identified concerns that the industry not be required to accept cheques as a form of payment and that this be left to the discretion of the operators.

Financial Impact

No direct financial impact would be experienced by the City of Mississauga.

Conclusion

Staff recommend that the Tow Truck Licensing By-law 521-04, as amended, be amended to include requirements that all Tow Truck Drivers accept multiple forms of payment including cash, debit and credit card payments when providing services provided under the Tow Truck Licensing By-law 521-04, as amended.

Furthermore, staff recommend that the by-law be amended to include requirements that all tow trucks drivers and owners maintain a POS device or equivalent equipment and/or software capable of completing debit and credit card transactions as approved by the Licence Manager. It is recommended that the amendments to the by-law become effective April 1, 2018.

Geoff Wright, P. Eng., MBA, Commissioner of Transportation and Works

Prepared by: Michael Foley, Manager, Mobile Licensing Enforcement

City of Mississauga

Corporate Report

MISSISSAUGA

Date: 2018/01/02	Originator's files:
To: Chair and Members of General Committee	
From: Paul Mitcham, P. Eng, MBA, Commissioner of Community Services	Meeting date: 2018/02/14

Subject

Sole Source Contract Award to Sutera Inc. for the Supply of In-ground Dog Waste Containers and Related Services

Recommendation

1. That the Purchasing Agent be authorized to execute a contract with Sutera Inc. on a sole source basis to supply 12 in-ground dog waste containers and provide related services for up to three years, ending December 31, 2020, in the estimated amount of $90,000.

2. That the Purchasing Agent be authorized to increase the contract with Sutera Inc. to supply approximately 18 additional in-ground dog waste containers and provide related services, where approved in budgets, for up to three years, ending December 31, 2020.

Report Highlights

- Dog waste is frequently placed in mixed-recyclables bins in City parks where it contaminates the entire bin, requiring it to be treated as landfill.
- Staff from the Environment Division, Community Services Department, and Parks and Forestry Division, Community Services Department, have collaborated in the development of an innovative prototype container that has the potential to separate and divert dog waste and increase the diversion of mix-recyclables by minimizing dog waste contamination in City parks.
- Sutera Inc. is the only supplier found to provide the containers and related services and is therefore a sole source supplier in accordance with the Purchasing By-law #374-2006, Schedule "A" 1(a) wherein it states: the Goods and/or Services are only available from one supplier by reason of: (ii) scarcity of supply in the market.
- Staff will install the proposed dog waste containers at six City park locations and at Animal Services where they will be evaluated for effectiveness against targets and performance measures over a one-year period.

Background

Improperly disposed of dog waste is a messy problem for the public that use public spaces and the staff that maintain them. It is also an impediment to increasing waste diversion from landfill.

Dog waste is frequently incorrectly placed in mixed-recyclables bins in City parks where it contaminates the entire bin, requiring the contents to be treated as landfill. While there is no reasonable current expectation of uncontaminated mixed-recyclables, recycling containers are not currently installed at leash-free sites, thereby reducing the diversion rate and increasing the frequency that garbage containing dog waste must be collected. Further, City resources are diverted to clean up dog waste left on the ground in some public areas and parks.

Dog waste contamination of mixed-waste recycling is widespread. Waste audits completed by City staff in the summers of 2015 and 2016 found that 100% of mixed-recycling bins in the audited City parks were contaminated with non-recyclables, and of that, approximately 55% of the total recycled material weight was contaminated with dog waste.

Staff from the Environment Division, Community Services Department, and Parks and Forestry Division, Community Services Department, have collaborated in the development of an innovative prototype container that has the potential to increase the correct collection of dog waste in City parks. The correctly collected dog waste can be diverted from landfill for conversion to renewable energy and fertilizer and prevent mixed-recyclable materials from becoming contaminated.

Comments

Due to limited commercially available dog waste containers that would meet heavy usage, City staff worked with Sutera Inc., a manufacturer of in-ground waste containers and pre-cast concrete forms, to design a pre-cast concrete, in-ground container for dog waste collection in public areas. The container was designed to:

- Get attention of pet owners and incent them to use the container
- Divert dog waste from landfill with minimal contamination
- Store a large volume of dog waste for up to four to six weeks without a pick-up
- Minimize odour in warm months

It is a fully in-ground, pre-cast concrete container that stores waste below grade where it is cooler and out of direct sunlight. This reduces odour and means that waste can be collected when the container is full (there are three container sizes for different applications). The above-grade access tube is designed to accept small bags of dog waste to minimize contamination.

The waste is emptied by a vacuum truck and taken to an anaerobic biodigester where it is safely converted into energy and fertilizer. The prototype design is illustrated in Figure 1 below.

Figure 1: Graphic of Proposed Dog Waste Capture System

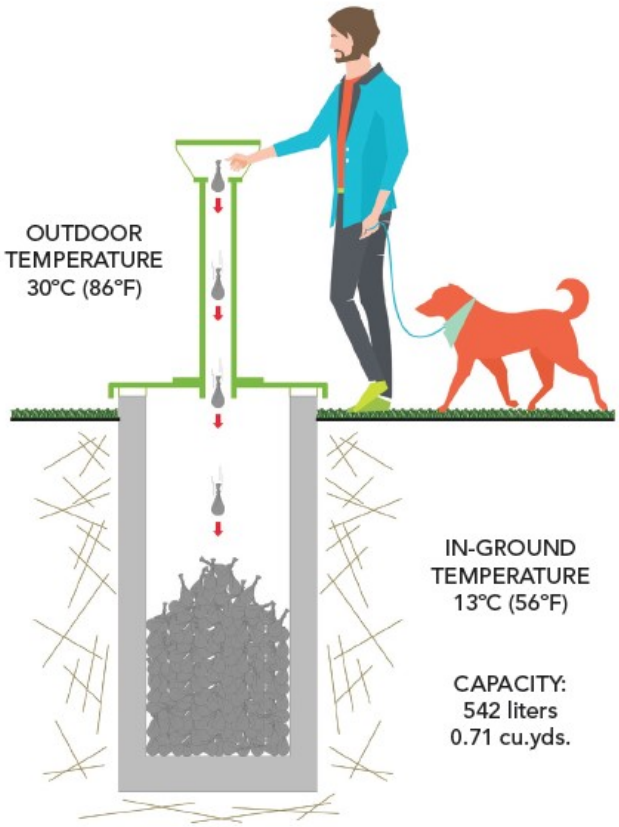

Testing of Containers

Staff will initially install the dog waste containers at six park locations and at the Animal Services facility on a test basis. The selected parks experience a high volume of "pet visits". The selected installation location within each park will be accessible by a paved surface and will be highly visible to pet owners. Mixed recycling containers will be introduced at parks with a goal of increasing waste diversion. The parks selected are noted in Table 1 below.

Table 1: Installation Locations

Ward	Park / Facility	Leash-Free Zone	No. of Sutera Inc. Containers
W2	Jack Darling Memorial Park	Yes	4
W2	Lakeside Park	Yes	2
W4	Community Common	Yes	2
W4	Animal Services	No	1
W9	Quenippenon Meadows	Yes	1
W9	Lake Aquitaine Park	Yes	1
W9	Totoredaca Park	Yes	1

The dog waste collection containers and vacuum system designed collaboratively by City of Mississauga staff and the vendor are currently being tested in Waterloo. After four months of testing in the summer of 2017, three containers diverted 2,350 kilograms (5,180 pounds) of dog waste from landfill. Dog owners expressed strong support for the program and the testing program generated national media interest.

Performance Targets and Evaluation

Staff will evaluate the performance of the containers against the targets indicated in Table 2 over the one year period of May 1, 2018 to April 30, 2019.

Table 2: Container Performance Measures and Targets

Performance Measure	Target
Amount of dog waste diverted from landfill	60 metric tonnes (59.05 tons) per annum
Frequency of pet waste collection visits by operator	Average four weeks
Diversion of mixed recyclables	60% of mass of mixed-recyclable material, uncontaminated with dog waste at newly installed recycling bins
Pet owner engagement	200 pet owner online survey completions

Following the evaluation period and subject to results of the first phase and budget approval, staff have structured the procurement with Sutera Inc. to be in a position of readiness to install approximately 18 more containers at additional park locations where it is feasible. Future containers and service methods may be modified in response to operational requirements and public feedback.

Sole Source Contract Award to Sutera Inc.

The dog waste container design was developed collaboratively between staff in the City's Environment Division (Community Services Department) and Sutera Inc. and is a custom solution. Research conducted by staff did not reveal any other suppliers offering this type of equipment and associated services. Given the scarcity of supply in the market, Sutera Inc. is deemed a sole source. The Purchasing By-law #374-2006, Schedule "A" 1(a) provides for sole source contract awards when the Goods and/or Services are only available from one supplier by reason of: (ii) scarcity of supply in the market.

Next Steps

Following procurement, the containers will be delivered for installation by City staff in the spring of 2018.

A communication effort targeting pet owners will be launched to coincide with the installation of the new containers; the effort will involve at-location signage and engagement with Leash-Free Mississauga.

The installation of the containers and related public communications will coincide in a planned manner with the deployment of new litter and mixed-recycling collection equipment in the parks system. The new waste equipment (dog waste, litter and mixed-recycling containers) to be placed in the parks is envisioned to function together and signage at these locations will be planned accordingly.

Waste audits will be conducted at the six parks during the first year of use to measure performance against targets indicated in this report.

See Appendix 1 for vendor-provided general installation instructions for dog waste container.

Strategic Plan

The dog waste containers advance the interests of the City's Strategic Plan, particularly the Green Pillar and progress towards waste diversion. The containers are intended to demonstrate these interests in a very visible manner, thereby causing expected and desirable behaviour change.

Financial Impact

The estimated capital cost of purchasing 12 dog waste containers is approximately $40,000, which is available in existing Project Number 14-323.

Approximately 18 more dog waste containers are expected to be installed where feasible over the next one to two years, subject to the results of the pilot, and budget approval. Budget for this purpose will be requested as appropriate.

The operating cost of servicing the containers is estimated at $16,000 per year and will be covered in the Parks and Forestry Division, Community Services Department, and the Animal Services, Enforcement Division, Transportation and Works Department, existing operating budgets. Servicing includes the collection of dog waste using a specialized vacuum vehicle at each location every four to six weeks, and transportation and disposal fees at the anaerobic bio-digester.

Please see Appendix 2 for a statement of work to progress the project.

Conclusion

Correct collection of dog waste ensures that it is diverted from landfill and does not contaminate mixed-waste recyclables. Staff have collaborated to develop an innovative solution working with Sutera Inc., a sole source supplier. The solution will help to collect dog waste correctly, which can then be converted to energy and fertilizer. Staff are proposing that in-ground dog waste containers be installed at six City parks and at Animal Services, for evaluation against performance measures. Pending successful evaluation outcomes, approximately 18 more containers are intended to be installed at additional locations where it is feasible.

A sole source contract award to Sutera Inc. is recommended, in accordance with the Purchasing By-law #374-2006, Schedule “A” 1(a) wherein it states: the Goods and/or Services are only available from one supplier by reason of: (ii) scarcity of supply in the market.

Attachments

Appendix 1: Installation Instructions for Dog Waste Container
Appendix 2: Scope of Work - Dog Waste Container

Paul Mitcham, P. Eng, MBA, Commissioner of Community Services

Prepared by: Christopher Pyke, Waste Management Supervisor

REFERENCE DETAIL No.1

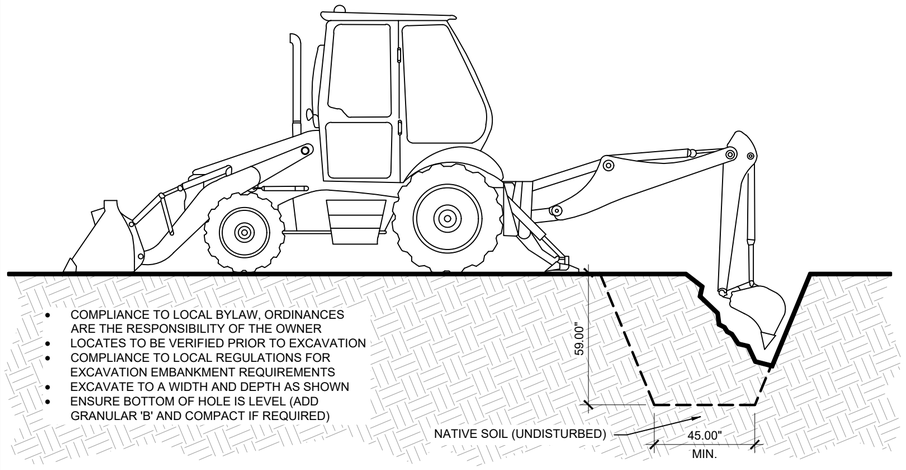

- COMPLIANCE TO LOCAL BYLAW, ORDINANCES ARE THE RESPONSIBILITY OF THE OWNER
- LOCATES TO BE VERIFIED PRIOR TO EXCAVATION
- COMPLIANCE TO LOCAL REGULATIONS FOR EXCAVATION EMBANKMENT REQUIREMENTS
- EXCAVATE TO A WIDTH AND DEPTH AS SHOWN
- ENSURE BOTTOM OF HOLE IS LEVEL (ADD GRANULAR 'B' AND COMPACT IF REQUIRED)

REFERENCE DETAIL No.2

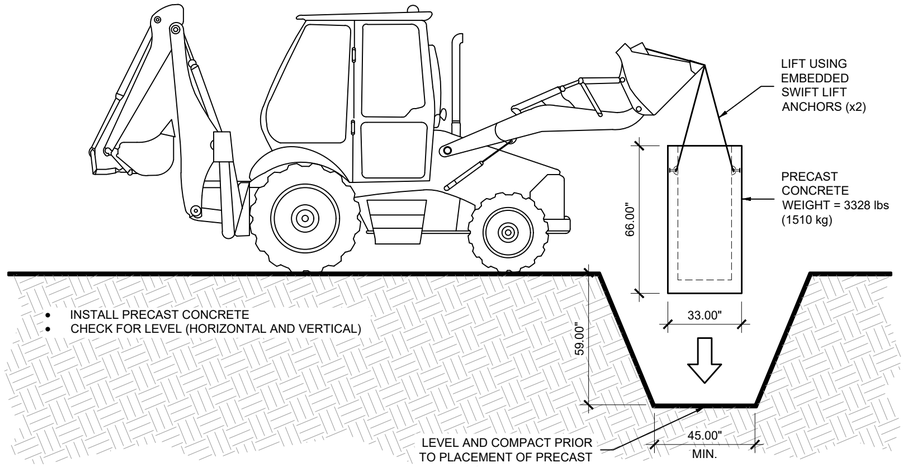

- INSTALL PRECAST CONCRETE
- CHECK FOR LEVEL (HORIZONTAL AND VERTICAL)

REFERENCE DETAIL No.3

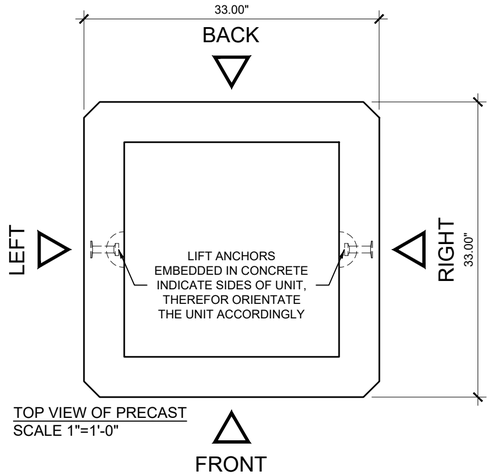

REFERENCE DETAIL No.4

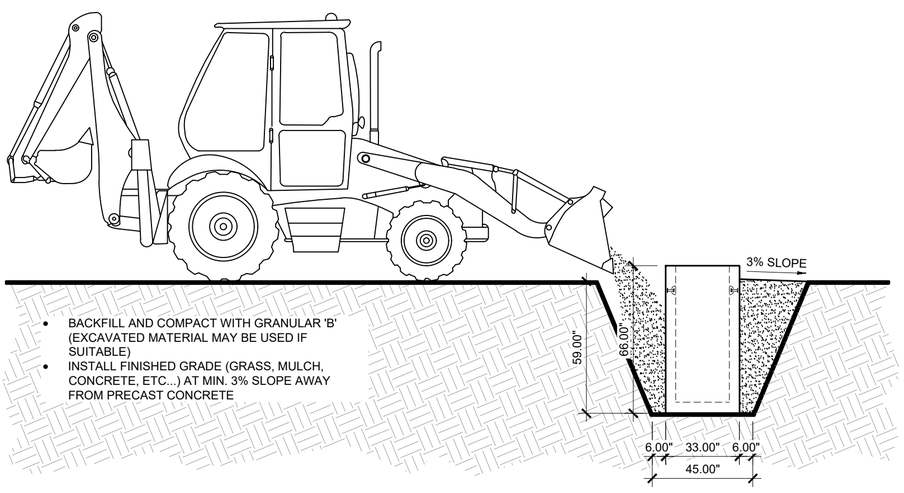

- BACKFILL AND COMPACT WITH GRANULAR 'B' (EXCAVATED MATERIAL MAY BE USED IF SUITABLE)
- INSTALL FINISHED GRADE (GRASS, MULCH, CONCRETE, ETC...) AT MIN. 3% SLOPE AWAY FROM PRECAST CONCRETE

REFERENCE DETAIL No.5

- INSTALL SUTERA LARGE STEEL LID
- INSTALL LARGE STEEL LID ANCHORS c/w GALVANIZED CONCRETE WEDGE ANCHOR BOLTS

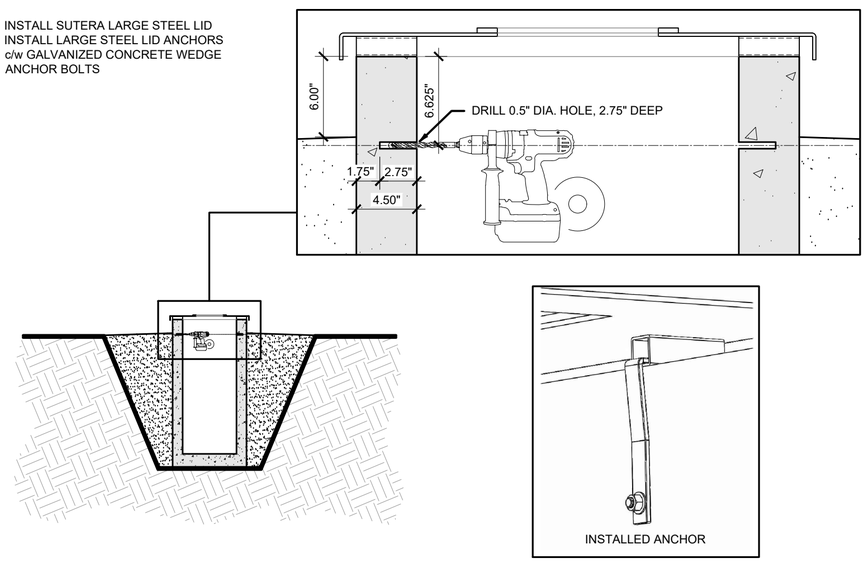

REFERENCE DETAIL No.6

- INSTALL SUTERA STEEL TUBE
- INSTALL PAD LOCK

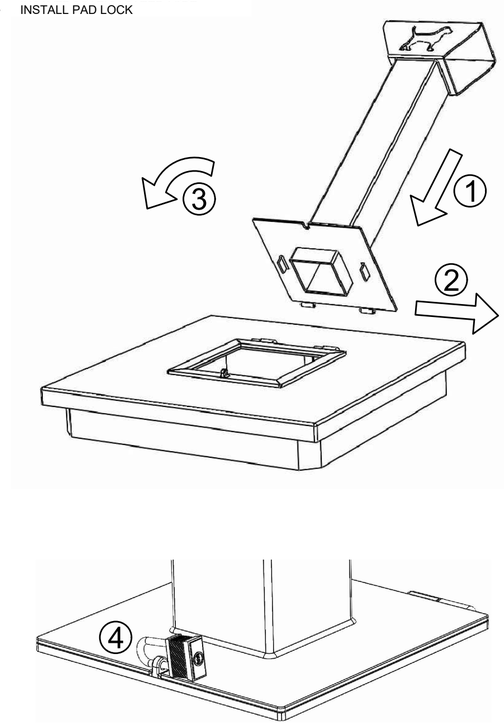

INSTALLATION SPECIFICATIONS:

REQUIRED TOOLS / EQUIPMENT / MACHINERY
1. BACKHOE
2. DUMP TRUCK
3. JUMPING JACK or PLATE COMPACTOR
4. STORY ROD
5. HAND LEVEL (6ft)
6. TAPE MEASURE
7. HAND SHOVEL
8. RAKE
9. HAMMER
10. HAMMER DRILL
11. 0.50" DIA. CONCRETE DRILL BIT
12. RATCHET c/w 0.75" SOCKET & EXTENSION BAR

STEP #1 - DETERMINE SITE LOCATION
1. FREE OF OVERHEAD POWER LINES, MIN. 10ft. (3m)
2. NO TREE OVERHANG
3. NO CANOPIES OVERHEAD
4. HAVE A SITE UTILITY LOCATE (UNDERGROUND) CONDUCTED WITHIN 10ft. (3m) OF PROPOSED INSTALLATION

STEP #2 - EXCAVATION (SEE REFERENCE DETAIL No.1)
1. EXCAVATE 45"x45"x59" DEEP
2. LEVEL AND COMPACT THE BASE OF EXCAVATION
   NOTE: APPROX. 1.37 CUBIC YARDS OF MATERIAL TO BE REMOVED FROM SITE PER SUTERA UNIT

STEP#3 - PLACING OF PRECAST (SEE REFERENCE DETAIL No.2)
1. TAKE DELIVERY OF BASE PRECAST UNIT WITH DELIVERY TRUCK CRANE, SITE CRANE, SITE CRANE OR BACKHOE, WHICHEVER IS AVAILABLE OR REQUIRED
2. DETERMINE ORIENTATION (FRONT FACE) OF UNIT (SEE REFERENCE DETAIL No.3)
3. LOWER PRECAST INTO EXCAVATED HOLE
4. CHECK FOR LEVEL, BOTH HORIZONTAL AND VERTICAL
5. INSURE TOP OF PRECAST TO TOP OF FINISHED GRADE IS 6.00"
   NOTE: PROVIDE A MIN. 3% GRADE SLOPING AWAY FROM UNIT

STEP #4 - BACKFILL (SEE REFERENCE DETAIL No.4)
1. BACKFILL WITH NATIVE MATERIAL (NO GRANULAR MATERIAL REQUIRED)
   NOTE: SUTERA UNITS HAVE MORE THAN ADEQUATE BALLAST, NO CONCRETE READY MIX REQUIRED
2. COMPACT IN SMALL LAYERS TO ACHIEVE 95% PROCTOR

STEP #5 - INSTALL LARGE STEEL LID ON PRECAST (SEE REFERENCE DETAIL No.5)
1. SET LARGE STEEL LID ON PRECAST, INSURE LEVEL AND SQUARE
2. USING THE LARGE STEEL LID ANCHOR PLATES, MARK HOLES TO BE DRILLED INTO THE PRECAST
3. USING A HAMMER DRILL AND 1/2" CONCRETE DRILL BIT, DRILL ONE HOLE PER ANCHOR 2.75" DEEP INTO PRECAST CONCRETE WALL
4. FASTEN THE ANCHORS INTO PLACE USING THE PROVIDED GALVANIZED CONCRETE WEDGE ANCHOR BOLTS WITH A 3/4" SOCKET

STEP #6 - INSTALL STEEL TUBE ONTO LARGE STEEL LID (SEE REFERENCE DETAIL No.6)
1. POSITION THE STEEL TUBE AT AN APPROX. 45 DEGREE ANGLE TO THE LARGE STEEL LID
2. ALIGNING THE HINGES, SLIDE INTO PLACE
3. ROTATE THE STEEL TUBE INTO FINAL RESTING POSITION
4. INSTALL PAD LOCK TO SECURE THE ACCESS LID

INSTALLATION COMPLETE

DATE	DESCRIPTION	INIT. BY
00/00/0000	ENTER DESCRIPTION	BK

REVISIONS

SUTERA
in-ground waste containment

SUTERA USA, LLC
700 RUPERT STREET
WATERLOO, ON CANADA N2V 2B5

55 COMMERCE CENTER
GREENVILLE, SC USA 29615

UNLESS OTHERWISE SPECIFIED DIMENSIONS ARE IN INCHES. DO NOT SCALE DRAWINGS

Part No.:	Drawn By: BK	Size: C (18"x24")
Drawing No.: 405-001	Scale: NTS	
Drawing Title: Installation Instructions	Sheet: 1 of 1	

Appendix 1

Statement of Work for Sutera's Dog Waste Containment System

1.0 Background

Based on national averages, 41% of Canadian households have at least one dog. Extrapolated, this translates into the city of Mississauga being home to over 300,000 dogs generating close to 60,000 metric tonnes of dog waste annually (500 grams of feces/day/dog). This dog population is only expected to increase in future years. Currently, the Region of Peel has 0% capability of recycling and diverting contaminated loads from City facilities. As a result of the co-mingling of dog waste within these recycling receptacles, these recyclable materials now have to be taken and treated as landfill.

2.0 Purpose

The purpose of this project is for The City of Mississauga is to establish a sustainable methodology to minimize and control the negative impacts of dog waste on the environment and residents (both dog owners and non-dog owners alike), while improving diversion rate by redirecting some of the 60,000 metric tonnes of waste from landfill.

Improvements in odour control, visual optics, public engagement/safety, and City personnel/staff safety are all expected benefits as a direct result of this project.

3.0 Project Scope

The following anticipated scope of work breakdown is, but not limited to the following:

- The City of Mississauga agrees to purchase from Sutera, twelve (12) dog waste containment systems as an initial purchase order as a way to segregate the single main source of contaminant (dog waste) from recycling receptacles
- The City of Mississauga reserves the right to purchase an additional eighteen (18) dog waste containment systems within the next two (2) years
- Sutera shall deliver the complete dog waste containment units (including precast concrete wells and steel above-grade towers) to the location(s) as specific by The City of Mississauga within city limits
- The City of Mississauga will be responsible for the installation of the dog waste containment units at the agreed to location(s)
- Sutera will provide servicing (emptying, transportation and disposal of contents) of each dog waste containment unit by the way of vacuum for a three (3) year term
- Dog waste collected in the Sutera dog waste containment units will be diverted from landfill and converted into renewable energy and/or converted into fertilizer suitable for land application.

City of Mississauga

Corporate Report

MISSISSAUGA

Date: 2018/01/15 To: Chair and Members of General Committee From: Paul Mitcham, P. Eng, MBA, Commissioner of Community Services	Originator's files: Meeting date: 2018/02/14

Subject

Sole Source Contract Awards for Provision of Electronic Resources for the Mississauga Library System

Recommendation

1. That OverDrive Inc. be approved as a sole source vendor for the supply and delivery of eBooks and eAudiobooks as outlined in the corporate report dated January 15, 2018 from the Commissioner of Community Services entitled Sole Source Contract Awards for Provision of Electronic Resources for the Mississauga Library System.

2. That Bridgeall Libraries Limited, CVS-Midwest Tapes, Ebsco Publishing Inc., Proquest LLC, LinkedIn Ireland Unlimited Company, McGraw Hill Education, OCLC, Inc., Library Ideas LLC, and Recorded Books, Inc. be approved as sole source vendors for the provision of streaming, downloadable and database resources.

3. That the Purchasing Agent be authorized to execute the appropriate forms of contract with OverDrive Inc. for the ongoing supply and delivery of eBooks and eAudiobooks, as required, and for which funding is approved in the budget, for the period 2018 through to 2023.

4. That the Purchasing Agent be authorized to execute the appropriate forms of contract with Bridgeall Libraries Limited, CVS-Midwest Tapes, Ebsco Publishing Inc., Proquest LLC, LinkedIn Ireland Unlimited Company, McGraw Hill Education, OCLC, Inc., Library Ideas LLC, and Recorded Books, Inc. for the ongoing supply and delivery of electronic streaming and downloadable resources, as required, and for which funding is approved in the budget, for the period 2018 through to 2023.

Report Highlights

- Electronic resources, including streaming, downloadable and database resources and

eBook/eAudiobooks are required by the Mississauga Library System to satisfy customer demand. The market for these electronic resources is served by speciality vendors who are deemed sole sources.

- Establishing the vendors who have exclusive rights to streaming, downloadable and database electronic resources, a shown on Appendix 1, as sole source vendors for the period 2018 through to 2023 is recommended in accordance with the Purchasing By-law # 374-2006, Schedule A 1. (a) (iii) the existence of exclusive rights such as patent, copyright or licence.
- Establishing Overdrive Inc., whose platform for service delivery is unique to them and whose publisher coverage is the most complete, as a sole source vendor for eBooks and eAudiobooks for the period 2018 through to 2023 is recommended in accordance with the Purchasing By-law # 374-2006, Schedule A 1. (a) (iv)) the complete item, service or system is unique to one vendor and no alternative or substitute exists within Canada.
- The Purchasing By-law # 374-2006 requires that sole source contract awards with a value of $100,000 or more be approved by Council.

Background

Electronic Databases and Streaming Services

The Mississauga Library System (Library) offers customers access to a variety of streaming, downloadable and database resources that are available from a variety of vendors. Each vendor offers access to quality products for which they have been granted exclusive distribution rights by the resources' producers. The Library has selected electronic resources that satisfy the demands of its customers.

These electronic resources are provided on a subscription basis and are subject to annual renewals. Successive renewals and increasing demand for electronic resources will, over the anticipated five year period, exceed the $100,000 threshold for which the Purchasing By-law requires Council approval.

EBook and eAudiobook Lending Service

OverDrive's service model differs from other databases listed here, as it offers a simple customer web and app-based service platform to allow customers to access library purchased eBooks and eAudiobooks,while enforcing complex terms of use established with commercial publishers to protect author rights. OverDrive negotiates terms with core commercial publishers and then makes the titles available for libraries to purchase and add to their collections. The collections available through Overdrive are the most extensive of any vendor – allowing Mississauga to tailor its collections to meet the needs of its constituents. Mississauga has built a collection of 40,000 items in the past nine years, which have circulated almost 2 million times. Customers have downloaded the app and are using this collection – year over year growth was

30% in 2016 and another 17% in 2017. Customers are trained and accustomed to using the service and user satisfaction is high.

OverDrive is the current service provider, originally selected in 2009 through a competitive process aligned with the City By-law. Overdrive still remains the industry leader, due to the continued enhancement of its mobile app and online platform and its unparalleled international library of publisher content. The apps and online service are unique and proprietary, meaning that they are not available from another supplier.

The whole package of apps, platform, services and extent of content is unique to OverDrive. Emerging technology does not yet approach this package. However, since currently the platform and the content are tied, the Library would risk losing some of its collection investment with migration to a different platform. Older titles could not be repurchased as they are no longer available and some titles would be lost due to the inability to transfer publisher rights from platform to platform. It is estimated that the Library would lose five to ten percent of the collection during a migration and there would likely be resistance and customer loss in any migration. The library is not prepared to risk our eBook investment at this time to move to another platform. The library will continue to follow developments in the industry to evaluate and plan for future changes as the market changes.

Publishers set the prices for titles and terms of use, not Overdrive. EBooks have been much more expensive than print materials due to significant publisher resistance to the new medium. Publishers have imposed higher (up to four and five times higher) prices and limits of circulation and time on eBook purchases. The vendor's share is not a significant part of the price paid and there has been little room for the vendors to provide significant discounts.

OverDrive continues to represent Best Value to the Library and the platform for service delivery is exclusive to them. Schedule 'A' of the Purchasing By-law #374-2006 provides for sole source contract awards under these circumstances, ref. Section 1.(a) (iv) the complete item, service or system is unique to one vendor and no alternative or substitute exists within Canada.

Comments

This report seeks authority to award sole source contracts to the vendors shown in Appendix 1 which also indicates the current electronic resources they provide. Additional electronic resources may be required from time to time from these and other vendors, which will be accommodated in accordance with the Purchasing By-law.

Financial Impact

Vendor Name	Estimated Annual Contract Value
OverDrive Inc.	$520,000

Bridgeall Libraries Limited	$30,420
CVS-Midwest Tapes	$75,000
Ebsco Publishing Inc.	$79,670
Proquest LLC	$127,266
LinkedIn Ireland Unlimited Company	$36,200
McGraw Hill Education	$24,968
OCLC, Inc.	$26,940
Library Ideas LLC	$102,000
Recorded Books, Inc.	$62,400

Budget for these contracts will be requested annually.

Conclusion

The Library strives to meet the demands of its customers by providing desirable electronic resources. Over time, core vendors have been established who provide access to a variety of streaming, downloadable and database resources on a subscription basis. Each of the vendors holds exclusive distribution rights, granted by the producer of the electronic resource. Each vendor on Appendix 1 is the sole source vendor for the electronic resource they provide.

OverDrive Inc. is the leading supplier in the eBook/eAudiobook lending market providing a service which combines a complex management and access platform that is unique to them. OverDrive is considered a sole source for the provision of this service.

The recommended sole source awards are provided for in the Purchasing By-law #374-2006, Schedule 'A', section 1 (a) (iii) the existence of exclusive rights such as patent, copyright or licence and (iv)) the complete item, service or system is unique to one vendor and no alternative or substitute exists within Canada, respectively.

Attachments

Appendix 1-ELECTRONIC RESOURCES VENDORS AND TITLES AS AT JANUARY 2018

Paul Mitcham, P. Eng, MBA, Commissioner of Community Services

Prepared by: Jennifer Stirling, Manager, Library Digital Services & Collections

MISSISSAUGA LIBRARY SYSTEM

APPENDIX 1: ELECTRONIC RESOURCES VENDORS AND TITLES AS AT JANUARY 2018

Vendor Name	Price in USD (1.20)	Price in CAD (est.)	Electronic Resource Title
Bridgeall Libraries Limited		$ 30,420.00	*CollectionHQ*
CVS Midwest Tapes		$ 75,000.00	*Hoopla*
Ebsco Publishing Inc.		$ 25,370.00	*Learning Express*
Ebsco Publishing Inc.		$ 36,300.00	*Canadian Reference Centre*
Ebsco Publishing Inc.	$ 15,000.00	$ 18,000.00	*Flipster*
Library Ideas LLC.	$ 85,000.00	$ 102,000.00	*Freegal music [5 downloads/week + 3 hours streaming/day]*
LinkedIn Ireland Unlimited Company		$ 36,200.00	*Lynda.com*
McGraw Hill Education	$ 19,206.00	$ 24,968.00	*Access Science*
OCLC, Inc.		$ 26,940.00	*WorldCat Cataloguing & Metadata Service*
OverDrive Inc.		$ 520,000.00	*Ebooks and e-audiobooks (Various Titles)*
ProQuest LLC		$ 33,924.00	*eLibrary*
ProQuest LLC		$ 62,407.00	*Safari Public Library*
ProQuest LLC		$ 9,335.00	*HNP Toronto Star*
ProQuest LLC	$ 18,000.00	$ 21,600.00	*PressReader*
Recorded Books, Inc.	$ 52,000.00	$ 62,400.00	*RB Digital Magazines*
	Total	**$ 1,084,864.00**	

Totals by Vendor	
Bridgeall Libraries Limited	$ 30,420.00
CVS Midwest Tapes	$ 75,000.00
Ebsco Publishing Inc.	$ 79,670.00
Library Ideas LLC.	$ 102,000.00
LinkedIn Ireland Unlimited Company	$ 36,200.00
McGraw Hill Education	$ 24,968.00
OCLC, Inc.	$ 26,940.00
OverDrive Inc.	$ 520,000.00
ProQuest LLC	$ 127,266.00
Recorded Books, Inc.	$ 62,400.00
Total	**$ 1,084,864.00**

City of Mississauga
Corporate Report

MISSISSAUGA

Date: 2018/01/30	Originator's files:
To: Chair and Members of General Committee	
From: Gary Kent CGA CPA, Commissioner of Corporate Services and Chief Financial Officer	Meeting date: 2018/02/14

Subject
Single Source Recommendation with Esri Canada Limited (Esri Canada), File # PRC000595, Contract Negotiation and Award

Recommendation
1. That the report of the Commissioner of Corporate Services and Chief Financial Officer dated January 30, 2018 and entitled Single Source Recommendation for Esri Canada Limited be received.

2. That the Purchasing Agent be authorized to initiate contract negotiations with Esri Canada Limited to establish a long term partnership, and to establish the licensing model and maintenance arrangements for a ten year period.

3. That the Purchasing Agent be authorized to execute the contract and all related ancillary documents with Esri Canada Limited on a single source basis for products, professional services and maintenance and support, subject to City Solicitor approval and annual budget approval for a five year contract term estimated at $5 million, with a five year renewal option.

4. Notwithstanding the requirements of section 18(2)(d) of the Purchasing Bylaw 374-06, as amended, the Purchasing Agent be authorized to negotiate and issue contract amendments and increase the value of the contract with Esri Canada Limited where necessary to accommodate growth and renewal in GIS applications and~~,~~ where the amount has been approved in the budget, in a form satisfactory to Legal Services.

5. That Esri Canada Limited be designated a "City Standard" for the ten year period, from the contract start date.

Report Highlights
- The City of Mississauga engaged the services of GTG Consulting through a competitive procurement to conduct a review of GIS use by staff and the public as well as knowledge

and governance of GIS and has produced a Geospatial Master Plan (GSMP) which provides recommendations regarding the optimization GIS.

- A key recommendation in the GSMP is implement the Esri platform for the City's GIS software and storage technology.
- Esri as an enterprise GIS platform is currently used by 96% of the municipalities in southern Ontario, including the Region of Peel, City of Brampton, Town of Oakville and Halton Region.
- The Esri platform combines desktop, internal servers, cloud based services, mobile apps and SaaS solutions providing the City with a scalable and flexible
- Today, the City is using Esri software for GIS analysis in Planning and Building, collecting the 2017 Employment Data survey, the City's Open Data portal, the Planning Information Hub and providing the GIS functionality for pavement management and map data for the Emergency Operations software DisasterLAN.
- The City is able to leverage the Region of Peel's procurement and licensing of Esri Canada Limited's products and services which was acquired through a competitive procurement process.
- It is recommended to authorize the Purchasing Agent to initiate contract negotiations and execute the contract with Esri Canada on a single source basis, for products, professional services, maintenance and support, subject to City Solicitor and annual budget approval.

Background

Geographic Information Systems, or GIS, have been in use at the City for over 20 years. Mapping solutions for City staff and the public have become central to how information is used and analysed. Solutions ranging from the traditional paper wall maps to online digital solutions such as iMaps, Culture on the Map and the Planning Information Hub have introduced improvements in decisions making and information sharing.

Both technology and software have undergone a dramatic shift during this time and GIS is no different. Recognizing that a review was needed, in 2017 the City retained GTG Consulting to prepare a Geospatial Master Plan (GSMP), to provide a roadmap for the future. The scope of review included software and data, and engaged staff across the City to obtain a detailed understanding of the current state of GIS. This review provided the background for the GSMP report which was endorsed by the Leadership Team on November 8, 2017. The report included storage, software, training and staffing recommendations and a five year plan for implementation.

Comments

Through a methodology that included consultation, benchmarking of comparable cities across Canada, GTG Consulting recommended that the City adopt Esri software as the enterprise GIS solution. Planning and Building currently uses Esri software for GIS analysis and the Planning Information Hub (PIH). New addition to the PIH, 3D Massing model is an example of a more

modern use of GIS, modeling and complex analysis. The Emergency Management section's software, DisasterLAN also uses Esri as its mapping platform.

The Esri platform is extensively used according to municipal benchmarking including the Region of Peel, City of Brampton, Town of Oakville and Halton Region. The City of Toronto is currently partnering with Esri Canada and U of T for their Open Data initiative.

By moving to the same platform as the Region of Peel, our coordination and planning efforts will be significantly easier. In 2015, the Region of Peel completed a GIS assessment and issued a competitive RFP process for a GIS platform and services, which resulted in Esri Canada Limited being selected as the successful proponent with its Esri platform.

It is the integrated nature of the Esri platform that provides solutions which can quickly be configured and shared with staff. Out of the box mobile and web solutions which can leverage the same data as desktop software, allow for the rapid development of solutions and sharing of data.

The City of Mississauga has a great deal of experience using GIS and is now well positioned to modernize and implement new innovative solutions that meet the future needs of staff and the public. The GSMP and 5 year road map provided a sound analysis and benchmarking exercise resulting in sound recommendations for the future use of GIS at the City of Mississauga. With the explosive growth of external services such as google maps, constituents are expecting to be able to find the information they need through interactive map applications. The Esri platform will enable the City to provide the tools to create, maintain and publish that information.

Purchasing By-law Authorization

The recommendation in this report is made in accordance with Schedule A of the Purchasing By-law #374-06, items 1(b)(vii) which states that a single source procurement method may be applied when, "It is advantageous to the City to acquire the Goods and/or Services from a supplier pursuant to the procurement process conducted by another Public Body"; and (a)(iv), wherein it states that "the complete item, service or system is unique to one vendor and no alternative or substitute exists within Canada".

Notwithstanding the requirements of section 18(2)(d) of the Purchasing Bylaw 374-06, as amended, the Purchasing Agent be authorized to negotiate and issue contract amendments and increase the value of the contract with Esri Canada Limited where necessary to accommodate growth and renewal in GIS applications and, where the amount has been approved in the budget, in a form satisfactory to Legal Services. The authority is necessary to accommodate current and future demand from staff and constituents for geo-sensitive data, applications and web sites in a rapidly evolving technology landscape that would otherwise require a return to Council on a frequent basis due to the financial limitations imposed by the Purchasing By-Law.

Information Technology, Legal Services and Materiel Management staff are collaborating to establish the detailed requirements, negotiate the final arrangements and prepare the requisite forms including the contract agreements.

Financial Impact

Staff will initiate discussions with Esri Canada Limited for a single source proposal that will establish a licensing model and maintenance agreement for Esri solutions identified in the Statement of Work in Appendix 1. The City is able to efficiently acquire Esri goods and services by partnering with the Region of Peel and leveraging their procurement process to establish City's Enterprise License Agreement.

Sufficient Capital funding is approved in PN 15513 and PN 18532 to implement the initial requirements and implementation of Esri products and Services. In addition, a GIS software maintenance budget of $400,000 is already in the IT Maintenance budget and will cover the initial maintenance costs. Future growth of GIS products and services will be implemented in the 5 year term subject to future business plan and budget approvals. Any transitional software maintenance costs associated with the migration from the current GIS system to the Esri platform will be funded from the project capital budget.

Conclusion

The City of Mississauga has been using GIS for over 20 years to provide analysis for decisions, maps for operational needs and as a visualisation tool. A comprehensive assessment and benchmarking exercise of GIS use at the City was undertaken by GTG Consulting resulting in the Geospatial Master Plan and series of future oriented recommendations.

A series of key recommendations in the GSMP provides a future state for the use of GIS technology, governance, storage and pilot initiatives. A key recommendation is the adoption of the Esri platform as the City's Enterprise GIS. The Esri platform provides desktop, mobile, server and cloud based solutions that will allow the City to make better use of our current spatial data and provide new functionality for analysis, data sharing and field solutions. It will also align us with the technology deployed in our neighbouring municipalities, including the Region of Peel.

This report proposes to authorize the Purchasing Agent to initiate contract negotiations and execute a contract with Esri Canada, on a single source basis, for products, professional services and maintenance and support, subject to City Solicitor and annual budget approval. The City is able to leverage the Region of Peels procurement through a competitive process to acquire the Esri products and services. This includes a renewal of existing maintenance and support and forecasted growth for the five year period. In year five, a progress report will be submitted to Council for information with a plan outlining cost estimates for the next five year period.

Attachments

Appendix 1: Esri Canada Limited – Statement of Work

G. Kent.

Gary Kent CGA CPA, Commissioner of Corporate Services and Chief Financial Officer

Prepared by: Simon Langham, IT GIS Project Manager

Appendix 1

Esri Canada Limited - Statement of Work

Esri Canada Limited products and professional services over a five (5) year term will enable a full transition of all internal and external GIS interfaces and data to the Esri platform and technologies. In addition, Esri's maintenance and support for software and technologies will be required to manage the City of Mississauga's GIS data, applications, interfaces and web pages.

The following Esri technology solutions that may be implemented over a ten year period include:

1. Esri Portal – On premise
2. ArcGIS Enterprise – On premise
3. ArcGIS GeoAnalytics Server – On premise
4. ArcGIS Image Server – On premise
5. ArcGIS Business Analyst Server – On premise
6. GeoEvent Server – On premise
7. ArcGIS Online – SaaS
8. Drone2Map – SaaS
9. Insights for ArcGIS – SaaS
10. ArcGIS Hub – SaaS
11. Esri Demographics - SaaS

It is expected that Esri Canada Limited will introduce new GIS technologies over the 10 year period. Newly introduced GIS technologies may be considered and brought forward through the business planning and budget process for approvals.

Esri Canada Limited Professional Services will be used during implementation of new modules and to support the transfer of technical and operational knowledge of new technology solutions. Fair market rates for Professional Services will be negotiated for the 5 year term.

The following table provides a representative quantity and fair market cost for Esri product licensing, maintenance and support.

Software Licensing						
Products	**Existing Licenses**	**Additional Licenses Needed**	**Cost Per License**	**Software Total**	**Maintenance Cost Per License**	**Maintenance Total**
ArcGIS Desktop Basic	5	0	$0	$0	$0	$0
ArcGIS Desktop Standard	0	92	$8,305	$764,060	$2,330	$214,360
ArcGIS Desktop Advanced	1	32	$13,840	$442,880	$2,590	$85,470
ArcGIS Desktop Extensions Options	9	91	$3,025	$275,275	$485	$48,500
ArcGIS for Server Enterprise Advanced (External/ Internal)	0	2	$65,400	$130,800	$17,120	$34,240
ArcGIS for Server Enterprise Advanced Staging (Dev/Test)	0	2	$32,700	$65,400	$8,560	$17,120
Total				**$1,678,415**		**$399,690**

Summary of proposed 5 year Expenditures

Product / Service	**Total**
Licenses	$1,678,415
Software & Maintenance	$1,598,760
Professional Services	$1,067,390
Future Growth	$655,435
5 Year Total	**$5,000,000**

City of Mississauga

Corporate Report

MISSISSAUGA

Date: 2018/01/22 To: Chair and Members of General Committee From: Gary Kent, CPA, CGA, Commissioner of Corporate Services and Chief Financial Officer	Originator's files: CA.11.DEL Meeting date: 2018/02/14

Subject

Delegation of Authority- Acquisition, Disposal, Administration and Lease of Land and Property- July 1, 2017 to December 31, 2017

Recommendation

That the report dated January 22, 2018 from the Commissioner of Corporate Services and Chief Financial Officer entitled, "Delegation of Authority- Acquisition, Disposal, Administration and Lease of Land and Property – July 1, 2017 to December 31, 2017", be received for information

Background

The Delegation of Authority By-law 375-2008, approved by Council on November 12, 2008, provides delegated authority for the approval and execution of real estate agreements. Sections 3 and 4 of the by-law provides delegated authority to approve and conclude real property transactions at four staff levels; Manager, Director, Commissioner and City Manager, depending on the value of the transaction.

Delegated authority to approve and conclude real estate transactions is subject to the provisions outlined in Corporate Policy No. 05-04-01, Acquisition and Disposal of Real Property. Prior to the completion of any real estate transaction, all criteria of the Policy and Delegation of Authority By-law must be met. Section 4.5 of the Delegation of Authority By-law 375-2008, requires that the exercise of Delegated Authority be reported to Council on a semi-annual basis. This report covers the real property transactions which were completed under this delegation by-law in the second half of 2017.

Comments

During the period of July 1, 2017 to December 31, 2017, a total of 39 real estate matters were approved under Delegated Authority. A breakdown of these matters is as follows:

- Acquisitions – Land: 2
- Acquisitions- Easements: 4

- Disposals - Easements: 1
- Leases, Licenses and Other Agreements (City Use): 10
- Leases, Licenses and Other Agreements (Third Party Use): 22

In addition to the above noted transactions, one (1) easement transaction was completed with the Region of Peel under the Easement Protocol By-law 0296-2007, and one (1) encroachment agreement was executed pursuant to the Encroachment By-law 0057-2004.

Financial Impact

A breakdown of the financial implications of the real estate transactions for the period of July 1, 2017 to December 31, 2017 is shown on Appendices 1-5 of this report.
Prior to transaction approval, where applicable, Realty Services staff has confirmed with Financial Services staff that the appropriate funds are available in the budget. The availability of funds is a condition and requirement for approval under delegated authority

Conclusion

This report is forwarded for information pursuant to Delegation of Authority By-law 0375-2008. Realty Services confirms that all transactions approved under delegation of Authority for the period of July 1, 2017 to December 31, 2017 are in compliance with the Delegation of Authority By-law 0375-2008, Corporate Policy No. 05-04-01, and the Notice By-law 215-2008, as amended, where applicable.

Attachments

Appendix 1: Acquisition of Land and Easements- July 1, 2017 to December 31, 2017
Appendix 2: Disposition of Land and Easements- July 1, 2017 to December 31, 2017
Appendix 3: Leases, Licenses and other Agreements (City use) - July 1, 2017 to December 31, 2017
Appendix 4: Leases, Licenses and other Agreements (Third Party Use) - July 1, 2017 to December 31, 2017

G. Kent.

Gary Kent, CPA, CGA,
Commissioner of Corporate Services and Chief Financial Officer

Prepared by: Sheryl Badin, Acting Manager, Realty Services, Facilities & Property Managment

Acquisition of Land and Easements ~ July 1, 2017 to December 31 , 2017				
File Number	**Approved By**	**Date of Approval**	**Report**	**Total Consideration**
PO.12.DAN	Director, Facilities and Property Management	2017/08/23	**Grant of Easement Agreement from Her Majesty The Queen In Right of Ontario as represented by The Minister of Infrastructure, as represented by Ontario Infrastructure and Lands Corporation for an access easement to the new Park 302, east of Danville Road and north of Highway 401 (Ward 5)**	$91,125
PO.12.DUN	Manager, Realty Services	2017/09/08	**Easement Conveyance Agreement between The City of Mississauga and Girl Guides of Canada/Guides du Canada for a permanent easement for various utility services – 1563 Dundas Street West (Ward 6)**	$15,000 plus payment of Transferor's legal fees up to $1,500
PO.10.OLD	Manager, Realty Services	2017/10/26	**Confidentiality Agreement and Agency Disclosure Form between The Corporation of the City of Mississauga and Colliers Macaulay Nicolls Inc. and Alvarez & Marsal Canada Inc. - Court approved sales process documentation for submitting bids for the partial acquisition of 1200 Old Derry Road**	nominal
PO.10.AVO	Manager, Realty Services	2017/11/14	**Acknowledgement of Confidential Information and Non-Disclosure by The Corporation of the City of Mississauga in connection with the potential acquisition of 551 Avonhead Road owned by Ontario Infrastructure and Lands Corporation – (Ward 2)**	nominal
PO.12.TOR	Manager, Realty Services	2017/11/28	**Temporary Easement Conveyance Agreement between Mak Realty Inc. and The Corporation of the City of Mississauga – Torbram Road Grade Separation Project (Ward 5)**	$19,152.00 plus payment of legal fees of $3,000.00
PO.12.BRI	Manager, Realty Services	2017/12/15	**Easement Conveyance Agreement between The Corporation of the City of Mississauga and Fletcher's Creek Co-operative Homes Inc. - Part of premises know as 1400 Bristol Road West (Ward 6)**	Transferor's reasonable legal fees up to $1,500

Appendix 2
Disposition of Land and Easements

Disposition of Land and Easements ~ July 1, 2017 to December 31, 2017				
File Number	**Approved By**	**Date of Approval**	**Report**	**Total Consideration**
PO.12.LOR	Manager, Realty Services	2017/11/28	**Grant of Temporary Easement, Watermain and Fire Suppression Services, 2295 Loreland Avenue, Ann and Victor Richards, Ward 1**	$15,000

Appendix 3
Leases, Licenses and other Agreements (City Use)
File: CA.11.DEL

Leases, Licenses and Other Agreements, City Use – July 1, 2017 to December 31, 2017				
File Number	**Approved By**	**Date of Approval**	**Report**	**Total Consideration**
PO.13.MEA	Manager, Realty Services	2017/09/12	**Non- Profit Agreement with First Capital (Meadowvale) Corporation, for the use of certain space within Meadowvale Town Centre for MiWay Information Session (Ward 9)**	nominal
PO.13.CIT	Manager, Realty Services	2017/09/28	**Lease Extension Letter with Square One Property Corporation and the City of Mississauga, for use by the Square One Older Adult Centre located at Square One Shopping Centre, 100 City Centre Drive (Ward 4)**	$2,850.00 for 3 month term
PO.13.RAT	Manager, Realty Services	2017/09/29	**Permission to Enter Agreement between the City of Mississauga and Square One Property Corporation / OMERS Realty Management Corporation to grant the City access to private lands located within 309 Rathburn Road West (Ward 4)**	Nominal
PO.13.MON	Manager, Realty Services	2017/10/24	**Consent to Enter Agreement with Peel Condominium Corporation No. 169 at 6100 Montevideo Road (Ward 9)**	Nominal
PO.13.MAT	Commissioner, Corporate Services and Chief Financial Officer	2017/10/30	**Lease Extension and Amending Agreement with Her Majesty the Queen in Right of Ontario as represented by The Minister of Infrastructure, lands located south of Matheson Boulevard East and north of Eglinton Avenue East (Ward 5)**	$189,000.00 for 5 year term.

Appendix 3
Leases, Licenses and other Agreements (City Use)
File: CA.11.DEL

PO.13.QUE	Manager, Realty Services	2017/11/01	**License Renewal Agreement (Recreational) – Lands for Public Recreational Purposes between Her Majesty The Queen, in Right of Ontario, as Represented by The Minister of Infrastructure and The Corporation of the City of Mississauga, for the purpose of the Queensway Trail – Phase 1 (Winston Churchill to Fifth Line) (Ward 2)**	$17,485.85 for the five year term
PO.13.QUE	Director, Facilities and Property Management	2017/11/02	**License of Land for Public Recreational Purposes between Her Majesty the Queen, in Right of Ontario as Represented by The Minister of Infrastructure and the Corporation of the City of Mississauga, for the purpose of the Queensway Trail – Phase 2 & 3 (Glengarry Road to Stanfield Road) (Wards 1 and 7)**	$62,438.00 for the five year term
PO.13.DUN	Manager, Realty Services	2017/11/15	**Consent to Enter Agreement between the City of Mississauga and Erinwood Shopping Centre Inc. to grant the City access to private lands located at 2400 Dundas Street West (Ward 2)**	Nominal
PO.13.DUN	Manager, Realty Services	2017/11/15	**Consent to Enter Agreement between the City of Mississauga and Woodchester Investments Inc. to grant the City access to private lands located at 2458 Dundas Street West (Ward 2)**	Nominal
PO.13.ERI	City Manager and Chief Administrative Officer.	2017/12/07	**Third Lease Extension and Amending Agreement with PCM Sheridan Inc. for Sheridan Branch Library Space in Sheridan Centre, 2225 Erin Mills Parkway (Ward 8)**	$947,170 including additional rent over 5 year term

Appendix 4
Leases, Licenses and other Agreements (Third Party Use)
File: CA.11.DEL

Leases, Licenses and Other Agreements, Third Party Use – July 1, 2017 to December 31, 2017				
File Number	**Approved By**	**Date of Approval**	**Report**	**Total Consideratio**
PO.13.ROS	Manager, Realty Services	2017/07/17	**License Extension and Amending Agreement with Landmark Sport Group Inc. for office space on the second floor at Hershey Sports Centre, 5500 Rose Cherry Place (Ward 5)**	$17552.50 for the 10 month term
PO.13.DUN	Manager, Realty Services	2017/07/18	**Consent to Enter Agreement between the City of Mississauga and the Regional Municipality of Peel to grant the Region access to City lands located within Erindale Park at Dundas Street West and Mississauga Road (Ward 6)**	Nominal
PO.13.TOM	Manager, Realty Services	2017/07/31	**Shared Use and License Agreement between the Corporation of the City of Mississauga and the Peel District School Board to Permit the Installation of an Access and Fitness Trail at the Tomken Middle School located at 3160 Tomken Road (Ward 3)**	Nominal
PO.13.STA	Manager, Realty Services	2017/08/04	**License Agreement with Mississauga Chargers Hockey Club Inc., Rooms 123, 126, 218 and Storage Room 130 at Port Credit Arena (Ward 1)**	$56,900 for the 5 year term
PO.13.CAC	Manager, Realty Services	2017/08/08	**License Agreement between The Corporation of the City of Mississauga and The Greater Toronto Airports Authority – Noise Monitoring Equipment located at Tobias Mason Park (Ward 10)**	$2,500 for the 5 year term

Appendix 4
Leases, Licenses and other Agreements (Third Party Use)
File: CA.11.DEL

PO.13.OSP	Manager, Realty Services	2017/08/08	**License Agreement between The Corporation of the City of Mississauga and The Greater Toronto Airports Authority – Noise Monitoring Equipment located at Lisgar Green Park (Ward 10)**	$2,500 for the 5 year term
PO.13.DUN	Manager, Realty Services	2017/08/24	**License Agreement with 2565538 Ontario Ltd. (operating as B.F. O'Neill's Vacuum Centre) for use of a portion of closed out part of Jarvis Street, adjacent to 1615 Dundas Street West, for automobile parking (Ward 6)**	$7,500 for the 5 year term
PO.13.TOR	Manager, Realty Services	2017/09/06	**Arena Concessionaire License Agreement between The Corporation of the City of Mississauga and Karoly Koncz for space located at Meadowvale Four Rinks Arena (Ward 9)**	$22,500 for the 5 year term
PO.13.BRO	Manager, Realty Services	2017/09/13	**Management and Operations Extension and Amending Agreement between the City of Mississauga and Mississauga Theatre Alliance for set building and storage at 180 Broadway Street (Ward 11)**	Nominal
PO.13.DIX	Manager, Realty Services	2017/09/13	**Management and Operations Extension and Amending Agreement between the City of Mississauga and Mississauga Theatre Alliance for use, management and operation of the Maja Prentice Theatre located at the Burnhamthorpe Branch Library at 3650 Dixie Road (Ward 3)**	Nominal

Appendix 4
Leases, Licenses and other Agreements (Third Party Use)
File: CA.11.DEL

PO.13.CRE	Manager, Realty Services	2017/09/26	**Consent to Enter Agreement between the City of Mississauga and the Ministry of Transportation of Ontario to grant MTO access to City lands located at 6545 Creditview Road, known as the Harris Farm (Ward 11)**	Nominal
PO.13.CEN	Manager, Realty Services	2017/09/26	**Consent to Enter Agreement between the City of Mississauga and the Ministry of Transportation of Ontario to grant MTO access to City lands located at 6952 – 7030 Century Avenue, known as Mullet Creek (Ward 9)**	Nominal
PO.13.MAT	Director, Facilities and Property Management	2017/10/11	**License Agreement between The Corporation of the City of Mississauga and Score International Hockey School Inc. for space located at Iceland Arena (705 Matheson Blvd. East) (Ward 5)**	$64,600 for the 5 year term
PO.13.ROS	Commissioner of Corporate Services and Chief Financial Officer	2017/10/13	**Amending Agreement between The Corporation of the City of Mississauga and Golazo Inc. for space located at the Hershey Sports Complex (5600 Rose Cherry Place) (Ward 5)**	$187,287 for the 5 year term
PO.13.LAK	Manager, Realty Services	2017/10/24	**Management and Operation Amending Agreement with Mississauga Sailing Club, Lakefront Promenade Park (Ward 1)**	Nominal

Appendix 4
Leases, Licenses and other Agreements (Third Party Use)
File: CA.11.DEL

PO.13.ENO	Manager, Realty Services	2017/10/25	**License Agreement between The Corporation of the City of Mississauga and Tetra Society of North America for the use of a portion of the Derry House located at 875 Enola Avenue for office and meeting space**	$300.00 per month for 21 months
PO.13.FRO	Manager, Realty Services	2017/11/09	**Consent to Enter Agreement between the City of Mississauga and the Regional Municipality of Peel to grant the Region access to City lands located at 105 Front Street (Ward 1)**	Nominal
PO.13.LAK	Manager, Realty Services	2017/11/23	**License Agreement between The Corporation of the City of Mississauga and Port Credit Business Improvement Area, a local board of the City of Mississauga, established through Mississauga By-law No. 518-92 – Lighthouse Light Fixture Equipment located at 105 Lakeshore Road West (Ward 1)**	Nominal
PO.13.ENO	City Manager and Chief Administrative Officer	2017/12/11	**Sublease Amending Agreement with 2016169 Ontario Inc. (o/a Blyth Academy) for Adamson House at 850 Enola Avenue (Ward 1)**	$487,500 for the 5 year term
PO.13.STA	Manager, Realty Services	2017/12/20	**License Agreement with Port Credit Figure Skating Club, Two Storage Rooms at Port Credit Arena (Ward 1)**	$16,300 for the 5 year tern

Appendix 4
Leases, Licenses and other Agreements (Third Party Use)
File: CA.11.DEL

PO.13.CIT	City Manager and Chief Administrative Officer	2018/01/03	**The Extending and Amending Agreement to Management and Operation Agreement with Mississauga Civic Centre Art Gallery Corporation, Ground Floor Space in Civic Centre (Ward 4)**	Nominal
PO.13.TOM	Manager, Realty Services	2018/01/09	**Amending Agreement between The Corporation of the City of Mississauga and Chris Nestor for Skate Sharpening Services at Tomken Twin Arena (Ward 3)**	$4,032 for length of term

City of Mississauga

Corporate Report

MISSISSAUGA

Date: 2018/01/25	Originator's files:
To: Chair and Members of General Committee	
From: Gary Kent, CPA, CGA, Commissioner of Corporate Services and Chief Financial Officer	Meeting date: 2018/02/14

Subject

Civic Recognition Policy Updates

Recommendation

1. That General Committee endorses the addition of a youth category and accessibility criteria to the Civic Award of Recognition within the Civic Recognition Program as outlined in the Corporate Report dated January 25, 2018.

2. That the updates to the Civic Recognition Program Policy as outlined in Appendix 1 of the Civic Recognition Policy Updates report dated January 25, 2018 be approved to align with the new criteria.

Report Highlights

- The Civic Awards of Recognition Program recognizes volunteer community service and achievements in sports or the arts.
- The report outlines the proposed changes to the Civic Award of Recognition which currently accepts nominations in four categories.
- Staff received requests from members of the public and Members of Council to add accessibility and youth volunteer/civic engagement to the Civic Award of Recognition.
- In response, staff reviewed awards offered by other municipalities across Canada to determine what might be appropriate for the City of Mississauga.
- Mississauga is an inclusive city that welcomes diversity and encourages individuals from all ages and backgrounds to participate in civic life.
- Contributions to improve inclusion and accessibility and youth community and civic involvement align with the spirit of Mississauga and are deserving additions to the recognition program.

- Staff proposes adding a Youth Community and Civic Engagement category and accessibility criteria to the Civic Award of Recognition, within the Civic Recognition Program.

Background

The Civic Recognition Program recognizes outstanding achievements, voluntary contributions and significant milestones of residents and organizations. The program has been in operation since 1991 and consists of four types of recognition:

- Certificate of Recognition
- Civic Award of Recognition
- Civic Award of Merit
- Civic Award of Philanthropy

Present Status

The Civic Award of Recognition is a certificate bearing an embossed seal of the Corporation and signed by the Mayor. The certificate includes the recipient's name and a description of the achievement.

Currently, nominations for the Civic Award of Recognition can be submitted in four categories:

- Volunteer Community Service
- Achievement in Sports
- Achievement in the Arts
- Achievements other than in Sports or the Arts

Civic Awards of Recognition are presented to:

- Citizen members of committees such as the Library Board and the Traffic Safety Council.
- Individuals who have contributed 10 years or more of voluntary community service, in 10-year increments.
- Individuals whose achievements have made a significant impact at a national or international level.
- Voluntary/non-profit/community or cultural groups whose achievements or contributions have made an impact at a national or international level.

Each spring, the City issues a call for nominations and accepts submissions from the public, Mayor, Members of Council and City of Mississauga staff. Nominations are received by the Strategic Communications Division and are reviewed by Communications staff, in consultation with Members of Council and appropriate departments and affiliates. Mayor and Members of Council review the list of potential recipients before confirming final recipients. Approximately

100 nominees receive awards in the four categories. Most of the awards are presented for Voluntary Community Service.

Within the past year, staff received requests from members of the public and Members of Council to add accessibility and youth/civic engagement to the Civic Award of Recognition. In evaluating the requests, staff researched civic awards offered by municipalities across Canada to determine what might be appropriate for the City of Mississauga. Several municipalities recognize outstanding individuals and organizations who contribute to creating an inclusive and accessible environment in their respective communities. These range from specific accessibility award programs to civic award programs which have an accessibility category. A smaller number of municipalities also recognize youth achievements through various awards. Most awards in this area are youth award programs.

Comments

Accessibility

Mississauga is an inclusive city that welcomes diversity and encourages individuals from various backgrounds to participate in civic life. The City has an annual Exceptional Accessible Customer Service Award program that is given to employees who have gone above and beyond to provide accessible customer service to a customer(s) with a disability. The Universal Accessibility Design category in the Cultural Heritage Property Awards Program recognizes accessibility-related projects that create buildings which are accessible to all regardless of ability.

Adding criteria to the Civic Recognition Awards that highlights achievements in improving accessibility would enable Members of Council to recognize those contributions that support the dignity and inclusion of persons with disabilities.

Eligible nominees could be businesses who provide exceptional customer service to people with disabilities, community programs that remove barriers to participation, volunteers who improve access and community involvement for people with disabilities, organizations, businesses or individuals who show leadership in hiring people with disabilities and teachers who are innovative in creating accessible learning environments.

Staff proposes adding the following description to the criteria:

> “Businesses, community groups or individuals who have consistently contributed to removing physical, social or systemic barriers for individuals with disabilities.”

It should be noted that there is the possibility that the addition of accessibility criteria may trigger requests to recognize contributions in other areas such as the environment, diversity and/or inclusion. Should this happen, staff would conduct a similar thorough analysis to determine if additional changes to the award criteria are appropriate.

Youth

Mississauga is a vibrant city that encourages youth to be part of its transformational future growth. Youth volunteers in Mississauga are important citizens who make noteworthy community and civic contributions and often earn achievements for their outstanding work. As a result of their age they often do not meet the 10-year minimum and therefore are not eligible to be nominated for the Volunteer Community Service. Adding criteria that addresses this would allow Mayor and Council to recognize residents who are in their teens or early twenties for their achievements and outstanding community and civic contributions.

In Ontario, youth must complete a minimum of 40 volunteering hours to satisfy the requirements for high school graduation. The proposed Youth Community and Civic Engagement category would recognize volunteer service and civic engagement that is above and beyond what is required for graduation.

Staff proposes adding the following category and criteria:

> **"Youth Community and Civic Engagement**
> Nominees for this award are youth between 14 and 24 who have contributed more than 100 voluntary hours to community and civic involvement. Only individuals or youth groups whose contributions directly benefit Mississauga are eligible."

With these additions, staff proposes that the number of nominees recognized each year remain at 100 and that they continue to be chosen on a first come, first served basis.

Financial Impact

There will be minimal staff time involved in updating the Civic Recognition Policy and promotional material. There will be no additional financial impact.

Conclusion

The Civic Awards of Recognition Program recognizes volunteer community service and achievements in sports or the arts. In Mississauga, youth volunteers and those who support people with disabilities are important members of the community. Leadership in the area of inclusion and accessibility and the voluntary contributions of youth are deserving additions to the recognition program.

Attachments

Appendix 1: Civic Recognition Program – Clean Copy
Appendix 2: Civic Recognition Program – Tracked Changes

G. Kent.

Gary Kent, CPA, CGA, Commissioner of Corporate Services and Chief Financial Officer

Prepared by: Leslyn V. Johnson, Senior Communications Advisor

City of Mississauga

Corporate Policy & Procedure

MISSISSAUGA

Appendix 1

Policy Title: Civic Recognition Program – Clean Copy

Policy Number: 06-04-01

Draft Only - Clean Copy - January 29, 2018

Section:	**Public Relations**	Subsection:	**Recognition**
Effective Date:	**December 21, 2017**	Last Review Date:	**December, 2017**
Approved by: **Council**		Owner Division/Contact: **Strategic Communications, Corporate Services Department**	

Policy Statement

The Civic Recognition Program recognizes outstanding achievements, voluntary contributions and significant milestones of residents and organizations.

Purpose

This policy provides a method for the Mayor and Members of Council, on behalf of the residents of Mississauga, to recognize the efforts of local volunteers and non-profit groups working to improve the community, as well as the significant achievements and milestones of individuals and organizations.

Scope

All residents of Mississauga and organizations operating in Mississauga are eligible for recognition under this policy.

Individuals receiving recognition must reside in the City of Mississauga at the time of the volunteer service, achievement or milestone or they must have been educated or trained for most of their lives in the City of Mississauga. (For example, an athlete who is educated and trains for most of his/her life in Mississauga may attend university outside the city. The athlete's achievements while attending university may be recognized.)

Community groups receiving recognition must serve Mississauga residents. The majority of group members must be Mississauga residents; however, non-resident group members will also be recognized.

DRAFT

What Can Be Recognized

The Civic Recognition Program recognizes volunteer community service, achievements in sports, the arts or other fields of endeavour, philanthropy and significant milestones of individuals and organizations.

Exceptional or significant efforts or achievements that cannot be categorized in any of these groups may also warrant recognition at a civic level. The Strategic Communications Division, Corporate Services Department will review the request or nomination and make a recommendation to the Mayor and/or ward councillor(s) on an appropriate form of recognition, which may not necessarily take the same form as the recognition outlined in this policy.

Volunteer Community Service

Volunteer community service includes efforts toward improving the community, such as advancing health and social services, improving accessibility and developing recreational activities, culture or the arts within the community. Only volunteer community service to an organization which directly benefits Mississauga is eligible for recognition.

Youth Community and Civic Engagement

Nominees for this award are youth between 14 and 24 who have contributed more than 100 voluntary hours to community and civic activities. Only individuals or youth groups whose contributions directly benefit Mississauga are eligible.

Achievement in Sports

For the purpose of these awards, “sports” is defined as those activities requiring physical conditioning and/or refinement of motor skills so that competitive excellence may be achieved. Championships recognized for eligibility are those accepted by the sport's governing body to be the highest competition available to that sport, at either a local, regional, provincial, national or international level. Certificates in recognition of achievement in sports will be issued for the highest level achieved by the particular athlete or team, at the end of the sport's season. For example, a team that wins a City-wide championship as well as a regional championship will be eligible for a certificate in recognition of the regional championship only.

Achievement in the Arts

For the purpose of these awards, “the arts” includes:

- Performing arts, e.g. dance, drama, music
- Visual arts, e.g. painting, sculpting, photography
- Media arts, e.g. film, television, literature, and
- Creative arts, e.g. crafts

Recognition is given to individuals who have achieved acclaim through competitions, juried shows, art exhibitions or commissioned works.

Achievements Other than in Sports or the Arts
Achievements in areas other than sports or the arts, for example, academic achievement, may also be recognized. An accredited body in the field of endeavour may be consulted to confirm eligibility.

Philanthropy
Recognition is given to individuals who have demonstrated outstanding philanthropic leadership through their extraordinary personal commitment of time, talent and resources, their exceptional generosity, motivation of others and financial support.

Milestones
Ninetieth birthdays, 50th wedding anniversaries and subsequent birthdays or anniversaries at five-year intervals may be recognized as significant milestones of individuals.

Official openings, 10th anniversaries of start-up of organizations and businesses in Mississauga and subsequent anniversaries at 10-year intervals may be recognized as significant milestones of organizations.

Types of Recognition

The Civic Recognition Program consists of four types of recognition:

- Certificate of Recognition
- Civic Award of Recognition
- Civic Award of Merit
- Civic Award of Philanthropy

Certificate of Recognition

The Certificate of Recognition bears an embossed seal of the Corporation and is signed by the Mayor. The certificate includes the recipient's name and a description of the achievement.

Criteria
Certificates of Recognition are presented to:

- Individuals who have made a contribution to the wellbeing of the community, through volunteer community service, for less than 10 years
- Voluntary/non-profit/community or cultural groups whose actions, achievements and/or contributions have made an impact at a local, regional or provincial level
- Individuals, groups or teams who win city-wide, regional or provincial championships or exhibitions or who achieve other similar acclaim at a city-wide, regional or provincial level
- Significant milestones of individuals:
  - 50th wedding anniversaries and subsequent anniversaries at five-year intervals, and
  - 90th birthdays and subsequent birthdays at five-year intervals
- Significant milestones of organizations:

- Official openings
- 10th anniversaries of start-up of organizations and businesses in Mississauga, and
- Subsequent anniversaries at 10-year intervals

Civic Award of Recognition

The Civic Award of Recognition is a certificate bearing an embossed seal of the Corporation and signed by the Mayor. The certificate includes the recipient's name and a description of the achievement.

Criteria

Civic Awards of Recognition are presented to:

- Citizen members of committees such as the Library Board and the Traffic Safety Council
- Individuals who have contributed 10 years or more of voluntary community service, in 10-year increments
- Youth between 14 and 24 who have contributed at least 100 voluntary hours of community service or civic engagement
- Individuals whose achievements have made a significant impact at a national or international level
- Voluntary/non-profit/community or cultural groups whose achievements or contributions have made an impact at a national or international level, or
- Businesses, community groups or individuals who have consistently contributed to removing physical, social or systemic barriers for individuals with disabilities

Nomination

Certificate of Recognition/Civic Award of Recognition

Requests for certificates to recognize significant milestones may be forwarded directly to the Strategic Communications Division at any time throughout the year. Completion of a nomination form is not necessary.

Requests for Certificates of Recognition or a Civic Award of Recognition honouring achievements other than milestones must be submitted on a nomination form, which is available on the City website or from the Strategic Communications Division.

Requests for Certificates of Recognition may be submitted by members of the public. Nominations are to be forwarded to Communications staff for verification of eligibility requirements and preparation of the certificate. Requests are received throughout the year and are reviewed on an individual basis. Other departments are consulted as necessary.

Recipients of Civic Awards of Recognition may be nominated by a member of the public, the Mayor, a Member of Council or a member of City of Mississauga staff. Nominations are to be

forwarded to the Strategic Communications Division and will be reviewed by Communications staff, in consultation with Members of Council and appropriate departments and affiliates, to verify requirements for eligibility. Nominees who have previously been nominated will once again be eligible after a period of 10 years.

A list of potential recipients is reviewed by the Mayor and Members of Council before confirming final recipients and/or publishing names. Nominators and recipients of awards are notified by Communications staff.

The following information is requested:

- The number of years or hours the nominee(s) has been involved in the activity
- Specific dates the nominee(s) worked on project(s) or held title(s), if applicable
- Complete details of the group or individual's accomplishments, including specific examples, if applicable, and
- For groups, a complete list of the executive membership (names and addresses) must accompany the nomination form

The information on the nomination form assists staff in determining the appropriate type of recognition and in preparing the award. Incomplete nomination forms will be returned to the applicant and considered upon re-submission.

If an organization has been nominated for a group award and a member of that group is to be recognized individually with a personalized award certificate, a separate nomination form must be submitted. The individual must also meet the criteria outlined in this policy.

Presentation

Certificates of Recognition

Certificates of Recognition are presented to recipients by the Mayor and/or ward councillor or designate at the occasion upon which the recipient is being honoured. If there is no occasion or the Mayor or ward councillor is unable to attend, the certificate is mailed to the recipient. Recipients may also make arrangements with Communications staff to pick up the certificate at the Civic Centre.

Civic Awards of Recognition

Civic Awards of Recognition are presented at a civic recognition evening hosted by the City for award recipients and their guests. Generally held in the spring of each year, the evening features an awards ceremony with presentations by the Mayor and/or Members of Council, followed by a brief reception. If the Strategic Communications Division determines a second ceremony is required, it will be held in the fall.

Citizen members of civic committees receive their awards in the fall of each municipal election year to recognize the completion of their appointed term. Citizen members of committees who have stepped down mid-term or who have chosen to resign will be considered for recognition on a case-by-case basis. Citizen members of committees may also be honoured posthumously. The Director, Legislative Services and City Clerk, Corporate Services Department, in consultation with the respective Council committee representative(s), committee chair and relevant City staff will make the final determination.

Civic Award of Merit

A Civic Award of Merit is an award such as a plaque bearing the seal of the Corporation, signed by the Mayor and describing the recipient’s achievement. Organizations are not eligible to receive a Civic Award of Merit.

Criteria

The Civic Award of Merit is one of the City's highest forms of individual recognition and is reserved for individuals:

- Whose achievements are widely recognized at a national or international level
- Whose achievements have made a major impact at a national or international level, and
- Who have achieved success at the highest level of competition, where applicable, or have attained legendary status in their field of endeavour

These individuals are regarded by Council as truly exceptional.

Nomination

Nominations for the Civic Award of Merit may be made by the Mayor or a Member of Council and are considered at a closed session Council meeting. Completion of a nomination form is not necessary; however, all nominations should be supported by specific examples of the individual's achievements that reflect the criteria and attributes outlined in this policy.

The approval of Council is required before producing the award. Recipients are notified by the Mayor.

Presentation

Civic Awards of Merit are presented by the Mayor at a civic recognition event.

Civic Award of Philanthropy

A Civic Award of Philanthropy is an award such as a plaque bearing the seal of the Corporation, signed by the Mayor and describing the recipient’s achievements. No more than two awards will be presented in one calendar year. Organizations are not eligible to receive a Civic Award of Philanthropy.

Criteria
The Civic Award of Philanthropy is one of the highest forms of individual recognition and is reserved for individuals who have:

- Demonstrated an outstanding commitment and dedication to the City of Mississauga for a minimum of 25 years
- A proven record of voluntarily investing their passion, time, talents and financial support to better the community
- Demonstrated a commitment to improving the quality of life for Mississauga residents through their philanthropic efforts
- Demonstrated outstanding civic and charitable responsibility and exemplify the true spirit of giving
- Personally contributed to and supported organizations in the community, and
- Demonstrated a willingness to serve in leadership roles and to encourage and motivate others to do the same

A Civic Award of Philanthropy may be presented to a couple (married or common-law partners) who, as individuals, would be equally deserving of and eligible for the award.

Nomination
Nominations for the Civic Award of Philanthropy may be made by the Mayor or a Member of Council and are considered at a closed session Council meeting. Nominees must be alive at the time of their nomination. Completion of a nomination form is not necessary; however, all nominations should be supported by specific and current examples of the individual's achievements, evidence of leadership and contributions that reflect the criteria and attributes outlined in this policy.

The approval of Council is required before producing the award. Recipients are notified by the Mayor.

Presentation
Civic Award of Philanthropy awards are presented by the Mayor at a civic recognition event.

Administration of Program

The Strategic Communications Division administers this program and is responsible for:

- Receiving all nomination forms and requests
- Reviewing all nomination forms, in consultation with other departments, where necessary
- Notifying recipients of their awards, in conjunction with the Mayor's office and Members of Council
- Preparing the certificates or awards
- Coordinating all arrangements for civic recognition events, and

- Working with other business units to promote the program, including creating digital content and distributing the nomination form

Decision Making Process

In the event that a request appears to be in conflict with any of the criteria outlined in this policy, applicable staff will conduct an objective and impartial analysis of the request in relation to the criteria.

Staff involved in the analysis will make a recommendation, in writing, to the Commissioner of Corporate Services, to either decline or approve the request. The Commissioner's decision will be final and will be communicated to the applicant in a timely manner.

Revision History

Reference	Description
GC-103-2003 – 2003 03 260	
GC-0296-2010 – 2010 04 28	Philanthropy award added
GC-0322-2012 – 2012 05 09	Revised Civic Awards of Recognition section citizen members of committees who have stepped down or resigned mid-term will be considered for recognition
December 21, 2017	Scheduled review. Admin changes to reflect current practices; added decision-making process.

City of Mississauga

Corporate Policy & Procedure

MISSISSAUGA

Appendix 2

Policy Title: Civic Recognition Program – Tracked Changes

Policy Number: 06-04-01

Draft Only, January 29, 2018

Section:	**Public Relations**	Subsection:	**Recognition**
Effective Date:	**December 21, 2017**	Last Review Date:	**December, 2017**
Approved by: **Council**		Owner Division/Contact: **Strategic Communications, Corporate Services Department**	

Policy Statement

The Civic Recognition Program recognizes outstanding achievements, voluntary contributions and significant milestones of residents and organizations.

Purpose

This policy provides a method for the Mayor and Members of Council, on behalf of the residents of Mississauga, to recognize the efforts of local volunteers and non-profit groups working to improve the community, as well as the significant achievements and milestones of individuals and organizations.

Scope

All residents of Mississauga and organizations operating in Mississauga are eligible for recognition under this policy.

Individuals receiving recognition must reside in the City of Mississauga at the time of the volunteer service, achievement or milestone or they must have been educated or trained for most of their lives in the City of Mississauga. (For example, an athlete who is educated and trains for most of his/her life in Mississauga may attend university outside the city. The athlete's achievements while attending university may be recognized.)

Community groups receiving recognition must serve Mississauga residents. The majority of group members must be Mississauga residents; however, non-resident group members will also be recognized.

DRAFT

What Can Be Recognized

The Civic Recognition Program recognizes volunteer community service, achievements in sports, the arts or other fields of endeavour, philanthropy and significant milestones of individuals and organizations.

Exceptional or significant efforts or achievements that cannot be categorized in any of these groups may also warrant recognition at a civic level. The Strategic Communications Division, Corporate Services Department will review the request or nomination and make a recommendation to the Mayor and/or ward councillor(s) on an appropriate form of recognition, which may not necessarily take the same form as the recognition outlined in this policy.

Volunteer Community Service

Volunteer community service includes efforts toward improving the community, such as advancing health and social services, improving accessibility and developing recreational activities, culture or the arts within the community. Only volunteer community service to an organization which directly benefits Mississauga is eligible for recognition.

Youth Community and Civic Engagement

Nominees for this award are youth between 14 and 24 who have contributed more than 100 voluntary hours to community and civic activities. Only individuals or youth groups whose contributions directly benefit Mississauga are eligible.

Achievement in Sports

For the purpose of these awards, “sports” is defined as those activities requiring physical conditioning and/or refinement of motor skills so that competitive excellence may be achieved. Championships recognized for eligibility are those accepted by the sport's governing body to be the highest competition available to that sport, at either a local, regional, provincial, national or international level. Certificates in recognition of achievement in sports will be issued for the highest level achieved by the particular athlete or team, at the end of the sport's season. For example, a team that wins a City-wide championship as well as a regional championship will be eligible for a certificate in recognition of the regional championship only.

Achievement in the Arts

For the purpose of these awards, “the arts” includes:

- Performing arts, e.g. dance, drama, music
- Visual arts, e.g. painting, sculpting, photography
- Media arts, e.g. film, television, literature, and
- Creative arts, e.g. crafts

Recognition is given to individuals who have achieved acclaim through competitions, juried shows, art exhibitions or commissioned works.

Achievements Other than in Sports or the Arts
Achievements in areas other than sports or the arts, for example, academic achievement, may also be recognized. An accredited body in the field of endeavour may be consulted to confirm eligibility.

Philanthropy
Recognition is given to individuals who have demonstrated outstanding philanthropic leadership through their extraordinary personal commitment of time, talent and resources, their exceptional generosity, motivation of others and financial support.

Milestones
Ninetieth birthdays, 50th wedding anniversaries and subsequent birthdays or anniversaries at five-year intervals may be recognized as significant milestones of individuals.

Official openings, 10th anniversaries of start-up of organizations and businesses in Mississauga and subsequent anniversaries at 10-year intervals may be recognized as significant milestones of organizations.

Types of Recognition

The Civic Recognition Program consists of four types of recognition:

- Certificate of Recognition
- Civic Award of Recognition
- Civic Award of Merit
- Civic Award of Philanthropy

Certificate of Recognition

The Certificate of Recognition bears an embossed seal of the Corporation and is signed by the Mayor. The certificate includes the recipient's name and a description of the achievement.

Criteria
Certificates of Recognition are presented to:

- Individuals who have made a contribution to the wellbeing of the community, through volunteer community service, for less than 10 years
- Voluntary/non-profit/community or cultural groups whose actions, achievements and/or contributions have made an impact at a local, regional or provincial level
- Individuals, groups or teams who win city-wide, regional or provincial championships or exhibitions or who achieve other similar acclaim at a city-wide, regional or provincial level
- Significant milestones of individuals:
  - 50th wedding anniversaries and subsequent anniversaries at five-year intervals, and
  - 90th birthdays and subsequent birthdays at five-year intervals
- Significant milestones of organizations:

- Official openings
- 10th anniversaries of start-up of organizations and businesses in Mississauga, and
- Subsequent anniversaries at 10-year intervals

Civic Award of Recognition

The Civic Award of Recognition is a certificate bearing an embossed seal of the Corporation and signed by the Mayor. The certificate includes the recipient's name and a description of the achievement.

Criteria

Civic Awards of Recognition are presented to:

- Citizen members of committees such as the Library Board and the Traffic Safety Council
- Individuals who have contributed 10 years or more of voluntary community service, in 10-year increments
- Youth between 14 and 24 who have contributed at least 100 voluntary hours of community service or civic engagement
- Individuals whose achievements have made a significant impact at a national or international level
- Voluntary/non-profit/community or cultural groups whose achievements or contributions have made an impact at a national or international level, or
- Businesses, community groups or individuals who have consistently contributed to removing physical, social or systemic barriers for individuals with disabilities

Nomination

Certificate of Recognition/Civic Award of Recognition

Requests for certificates to recognize significant milestones may be forwarded directly to the Strategic Communications Division at any time throughout the year. Completion of a nomination form is not necessary.

Requests for Certificates of Recognition or a Civic Award of Recognition honouring achievements other than milestones must be submitted on a nomination form, which is available on the City website or from the Strategic Communications Division.

Requests for Certificates of Recognition may be submitted by members of the public. Nominations are to be forwarded to Communications staff for verification of eligibility requirements and preparation of the certificate. Requests are received throughout the year and are reviewed on an individual basis. Other departments are consulted as necessary.

Recipients of Civic Awards of Recognition may be nominated by a member of the public, the Mayor, a Member of Council or a member of City of Mississauga staff. Nominations are to be

forwarded to the Strategic Communications Division and will be reviewed by Communications staff, in consultation with Members of Council and appropriate departments and affiliates, to verify requirements for eligibility. Nominees who have previously been nominated will once again be eligible after a period of 10 years.

A list of potential recipients is reviewed by the Mayor and Members of Council before confirming final recipients and/or publishing names. Nominators and recipients of awards are notified by Communications staff.

The following information is requested:

- The number of years or hours the nominee(s) has been involved in the activity
- Specific dates the nominee(s) worked on project(s) or held title(s), if applicable
- Complete details of the group or individual's accomplishments, including specific examples, if applicable, and
- For groups, a complete list of the executive membership (names and addresses) must accompany the nomination form

The information on the nomination form assists staff in determining the appropriate type of recognition and in preparing the award. Incomplete nomination forms will be returned to the applicant and considered upon re-submission.

If an organization has been nominated for a group award and a member of that group is to be recognized individually with a personalized award certificate, a separate nomination form must be submitted. The individual must also meet the criteria outlined in this policy.

Presentation

Certificates of Recognition

Certificates of Recognition are presented to recipients by the Mayor and/or ward councillor or designate at the occasion upon which the recipient is being honoured. If there is no occasion or the Mayor or ward councillor is unable to attend, the certificate is mailed to the recipient. Recipients may also make arrangements with Communications staff to pick up the certificate at the Civic Centre.

Civic Awards of Recognition

Civic Awards of Recognition are presented at a civic recognition evening hosted by the City for award recipients and their guests. Generally held in the spring of each year, the evening features an awards ceremony with presentations by the Mayor and/or Members of Council, followed by a brief reception. If the Strategic Communications Division determines a second ceremony is required, it will be held in the fall.

Citizen members of civic committees receive their awards in the fall of each municipal election year to recognize the completion of their appointed term. Citizen members of committees who have stepped down mid-term or who have chosen to resign will be considered for recognition on a case-by-case basis. Citizen members of committees may also be honoured posthumously. The Director, Legislative Services and City Clerk, Corporate Services Department, in consultation with the respective Council committee representative(s), committee chair and relevant City staff will make the final determination.

Civic Award of Merit

A Civic Award of Merit is an award such as a plaque bearing the seal of the Corporation, signed by the Mayor and describing the recipient's achievement. Organizations are not eligible to receive a Civic Award of Merit.

Criteria

The Civic Award of Merit is one of the City's highest forms of individual recognition and is reserved for individuals:

- Whose achievements are widely recognized at a national or international level
- Whose achievements have made a major impact at a national or international level, and
- Who have achieved success at the highest level of competition, where applicable, or have attained legendary status in their field of endeavour

These individuals are regarded by Council as truly exceptional.

Nomination

Nominations for the Civic Award of Merit may be made by the Mayor or a Member of Council and are considered at a closed session Council meeting. Completion of a nomination form is not necessary; however, all nominations should be supported by specific examples of the individual's achievements that reflect the criteria and attributes outlined in this policy.

The approval of Council is required before producing the award. Recipients are notified by the Mayor.

Presentation

Civic Awards of Merit are presented by the Mayor at a civic recognition event.

Civic Award of Philanthropy

A Civic Award of Philanthropy is an award such as a plaque bearing the seal of the Corporation, signed by the Mayor and describing the recipient's achievements. No more than two awards will be presented in one calendar year. Organizations are not eligible to receive a Civic Award of Philanthropy.

Criteria

The Civic Award of Philanthropy is one of the highest forms of individual recognition and is reserved for individuals who have:

- Demonstrated an outstanding commitment and dedication to the City of Mississauga for a minimum of 25 years
- A proven record of voluntarily investing their passion, time, talents and financial support to better the community
- Demonstrated a commitment to improving the quality of life for Mississauga residents through their philanthropic efforts
- Demonstrated outstanding civic and charitable responsibility and exemplify the true spirit of giving
- Personally contributed to and supported organizations in the community, and
- Demonstrated a willingness to serve in leadership roles and to encourage and motivate others to do the same

A Civic Award of Philanthropy may be presented to a couple (married or common-law partners) who, as individuals, would be equally deserving of and eligible for the award.

Nomination

Nominations for the Civic Award of Philanthropy may be made by the Mayor or a Member of Council and are considered at a closed session Council meeting. Nominees must be alive at the time of their nomination. Completion of a nomination form is not necessary; however, all nominations should be supported by specific and current examples of the individual's achievements, evidence of leadership and contributions that reflect the criteria and attributes outlined in this policy.

The approval of Council is required before producing the award. Recipients are notified by the Mayor.

Presentation

Civic Award of Philanthropy awards are presented by the Mayor at a civic recognition event.

Administration of Program

The Strategic Communications Division administers this program and is responsible for:

- Receiving all nomination forms and requests
- Reviewing all nomination forms, in consultation with other departments, where necessary
- Notifying recipients of their awards, in conjunction with the Mayor's office and Members of Council
- Preparing the certificates or awards
- Coordinating all arrangements for civic recognition events, and

- Working with other business units to promote the program, including creating digital content and distributing the nomination form

Decision Making Process

In the event that a request appears to be in conflict with any of the criteria outlined in this policy, applicable staff will conduct an objective and impartial analysis of the request in relation to the criteria.

Staff involved in the analysis will make a recommendation, in writing, to the Commissioner of Corporate Services, to either decline or approve the request. The Commissioner's decision will be final and will be communicated to the applicant in a timely manner.

Revision History

Reference	Description
GC-103-2003 – 2003 03 260	
GC-0296-2010 – 2010 04 28	Philanthropy award added
GC-0322-2012 – 2012 05 09	Revised Civic Awards of Recognition section citizen members of committees who have stepped down or resigned mid-term will be considered for recognition
December 21, 2017	Scheduled review. Admin changes to reflect current practices; added decision-making process.

City of Mississauga

Corporate Report

MISSISSAUGA

Date: 2018/01/18 To: Chair and Members of General Committee From: Gary Kent, CPA, CGA, Commissioner of Corporate Services and Chief Financial Officer	Originator's files: Meeting date: 2018/02/14

Subject

Corporate Policy - Provincial Offences Act (POA) Collection of Defaulted Fines

Recommendation

That the Corporate Policy titled "Provincial Offences Act (POA) Collection of Defaulted Fines", attached as Appendix 1 to the Corporate Report dated January 18, 2018 from the Commissioner of Corporate Services and Chief Financial Officer titled "Corporate Policy – Provincial Offences Act (POA) Collection of Defaulted Fines" be approved.

Report Highlights

- The City is responsible for the collection of defaulted Provincial Offences Act (POA) fines and for determining when such fines shall be deemed uncollectible.
- This policy establishes the process for collection and write-off and sets out the roles and responsibilities of staff.
- The policy will apply to all defaulted POA fines.

Background

The City of Mississauga is responsible for the collection of defaulted POA fines and for determining when such fines should be deemed uncollectible. The City does not currently have a Corporate Policy related to the collection of POA fines. The City operates its municipal court pursuant to a Memorandum of Understanding (MOU) with the Attorney General for the Province of Ontario. Part of the MOU requires the municipality to collect and enforce fines authorized under the *Provincial Offences Act*. The Collections Unit, Revenue and Materiel Management, in consultation with the Court Administration Section, Legislative Services administer the collection and / or write-off of POA fines.

Tickets issued under the *Provincial Offences Act* provide the offender with three options: plea of guilty with payment, early resolution with a prosecutor or trial with notice of intention to appear in court. Upon conviction, the offender is required to pay the set fine, including costs and the applicable victim fine surcharge by the due date. If the offender does not pay by the due date an administrative fee is added to the fine and at this point the fine is considered in default.

Comments

Monthly, the Collections Unit receives a file from the Ministry of the Attorney General listing newly defaulted fines. A final notice for payment is issued. If payment is not received within 15 calendar days the Collections Unit begins collection actions, including adding the fine to the City's tax roll or to the tax roll in another municipality where the offender owns property, when applicable; forwarding to Legal Services to review for civil action; or forwarding to a third party collection agency. The collection action taken is based on the most effective method available for collection. All collection steps taken are documented in the Court Administration Management System (CAMS).

In accordance with Section 441.1 of the *Municipal Act, 2001*, defaulted fines will be added to the tax roll of property owners, either in Mississauga or another municipality, where possible. The City may pursue and execute agreements with other Ontario municipalities to allow unpaid POA fines to be added to the tax roll in those municipalities for collection purposes and to collect such amounts on behalf of the other municipalities on a reciprocal basis. The City participated in a pilot project in 2014-2015, based on the results of the project and interest from additional neighbouring municipalities; staff recommend that the City pursue opportunities to enter into inter-municipal agreements for the collection of POA fines.

Through approval of this policy, the Director, Revenue and Materiel Management is authorized to enter into inter-municipal agreements for the collection of outstanding POA fines with other municipalities and execute all necessary documents, in a form satisfactory to Legal Services.

If the defaulted fine cannot be added to the tax roll, Legal services will make an assessment as to whether further civil action is appropriate. If it is determined that civil action should not be pursued then the Collections Unit will pursue collection through a third party Collection Agency.

The provincial government provides authority for municipalities to remove uncollectible fines from their active collection through a write-off process for administrative purposes only. All reasonable effort to collect defaulted POA fines must be made before any write-off is considered. Uncollectible fines that are written off by the City do not absolve the offender from the requirement to pay the fine. Debts to the Crown remain until either payment of the fine or when the debtor is deceased.

The Collections Unit will review accounts in active collection and identify the fines where there is no further collection option available or where it is not cost effective to carry out further

collection activity. The account will be recommended for write-off and collection efforts will be stopped.

Through approval of this policy, the Director, Revenue & Materiel Management is authorized to write-off on a monthly basis the unpaid balance of individual fines if the amount owing is $55.00 or less. The Commissioner, Corporate Services is authorized to write-off on a quarterly basis all individual uncollectible fines of $25,000 or less. The total amount written off will be reported to Council annually, through the Year End Report on Operating Financial Results. The Commissioner will obtain Council approval to write off individual uncollectible fines over $25,000.

The draft Corporate Policy – Provincial Offences Act (POA) Collection of Defaulted Fines attached as Appendix 1 formalizes the process for the collection and write-off of POA fines and defines the roles and responsibilities for staff. The draft policy was presented to the Leadership Team on January 18, 2018 and received full endorsement.

Financial Impact

There is no direct financial impact associated with this policy.

Conclusion

Establishing a Provincial Offences Act (POA) Collection of Defaulted Fines policy ensures that there is a consistent approach to the collection of defaulted POA fines and provides for the write-off of fines deemed uncollectible.

Attachments

Appendix 1: Draft Corporate Policy – Provincial Offences Act (POA) Collection of Defaulted Fines

G. Kent.

Gary Kent, CPA, CGA, Commissioner of Corporate Services and Chief Financial Officer

Prepared by: Louise Cooke, Manager, Revenue and Taxation

City of Mississauga

Corporate Policy & Procedure

MISSISSAUGA

Policy Title: Provincial Offences Act (POA) Collection of Defaulted Fines

Policy Number: [Policy No.]

Appendix 1 – Draft Only – January 11, 2018

Section:	**Finance and Accounting**	Subsection:	**Accounts Receivable**
Effective Date:	**[Effective Date]**	Last Review Date:	**[Last Review]**
Approved by: **Click here to enter text.**		Owner Division/Contact: **Manager, Revenue & Taxation, Revenue and Materiel Management or the Manager, Court Administration, Legislative Services, Corporate Services Department.**	

Policy Statement

The City of Mississauga is responsible for the collection of defaulted *Provincial Offences Act* (POA) fines and for determining when such fines shall be deemed uncollectible.

Purpose

This policy establishes:

- An overview of the collection and Write-off processes, and
- Roles and responsibilities of staff

Scope

This policy applies to all defaulted *Provincial Offences Act* (the "Act") fines under Parts I and III of the Act.

Legislative Authority

This policy complies with the *Municipal Act, 2001* and the *Provincial Offences Act*, as amended.

The Write-Off Directive and Operating Guideline (the "Guideline") published by the Ministry of the Attorney General applies to all municipal partners that are subject to a POA Transfer Agreement, including the City of Mississauga. The Guideline provides guidance with respect to best practices regarding the write-off of POA accounts that have been deemed uncollectible, as well as mandatory requirements. This policy complies with and will be applied in accordance with the Guideline.

DRAFT

Definitions

For the purposes of this policy:

“CAMS” means the Court Administration Management System used by the City to maintain records of the collection status of Defaulted Fines.

“Certificate of Default” is a certificate filed by Collections staff or Legal Services, City Manager’s Department, with Small Claims Court ($25,000 and under) or Superior Court greater than $25,000) certifying the amount of the Defaulted Fine.

“City” means the Corporation of the City of Mississauga.

“Collection Agency” means a registered third party organization engaged by the City for the collection of Defaulted Fines.

“Defaulted Fine” means any part of a Fine that remains unpaid for a minimum of 15 calendar days after due date, as provided by the Ontario Ministry of the Attorney General’s Office.

“Final Notice” means a notice issued to an Offender by the City requesting payment of a Defaulted Fine prior to the collection processes being initiated.

“Fine” means a *Provincial Offences Act* fine imposed against an Offender in respect of a charge administered with the City’s court, the Provincial Offences Division of the Ontario Court of Justice. A Fine includes the fine itself, assessed by legislation or the Court, and all associated costs, surcharges and fees.

“ICON” means the Integrated Court Offence Network database owned by the Province of Ontario, which maintains records of the status of all provincial offences cases and Fines.

“Offender” means an individual or business that has received a Ticket.

“Ticket” means a certificate of offence issued by an officer under the *Provincial Offences Act*.

“Victim Fine Surcharge” is a surcharge imposed by the provincial government that is added to every Fine imposed under the *Provincial Offences Act*. The surcharge is credited to a special fund to assist victims of crime. The surcharge amount varies depending on the offense.

“Write-off” means the cessation of active collection.

Accountability

Commissioner, Corporate Services

The Commissioner of Corporate Services is accountable for:

- Authorizing Write-offs in accordance with this policy, and
- Reporting Write-offs to Council in accordance with this policy

Director, Revenue and Materiel Management

The Director, Revenue and Materiel Management, is accountable for:

- Ensuring all applicable managers/supervisors are aware of this policy, the Guidelines and any related protocols and/or any subsequent revisions
- Ensuring compliance with this policy, the Guidelines and any related protocols
- Authorizing write-off of the unpaid balance of Fines of $55 or less, and
- Entering into agreements with other Ontario municipalities to allow unpaid Fines to be added to the tax roll in those municipalities

Manager, Revenue and Taxation

The Manager, Revenue and Taxation is accountable for:

- Ensuring applicable staff are aware of and trained on this policy, the Guidelines and any related protocols, and/or any subsequent revisions
- Ensuring staff comply with this policy and follow any related guidelines and protocols, and
- Ensuring documentation/records of all transactions are maintained

Supervisor, Collections

The Supervisor, Collections, is accountable for:

- Ensuring administration of uncollectible Defaulted Fines in accordance with this policy, the Guidelines and any related protocols
- Ensuring compliance with this policy, the Guidelines and any related protocols, and
- Reviewing all accounts that are prepared for Write-off

Collections Unit Staff

Collections Unit staff are accountable for:

- Collection of Defaulted Fines in accordance with this policy, the Guidelines and any related protocols
- Preparing and reviewing accounts for Write-off
- Ensuring compliance with this policy, the Guidelines and any related protocols, and
- Liaising with Provincial Court Administration staff and/or Legal Services staff as required

The Manager, Court Administration

The Manager, Court Administration is accountable for:

- Ensuring applicable staff are aware of and trained on this policy, the Guidelines and any related protocols, and/or any subsequent revisions
- Ensuring staff comply with this policy, the Guidelines and any related protocols, and
- Ensuring documentation/records of all transactions are maintained

Provincial Court Administration Staff

Provincial Court Administration staff are accountable for:

- Ensuring compliance with this policy, the Guidelines and any related protocols
- Ensuring all court files are updated in CAMS and ICON as required
- Providing information to Legal Services, as requested, and
- Liaising with Collections staff regarding Offender payments

Legal Services Staff

Applicable Legal Services staff are accountable for:

- Ensuring compliance with this policy, the Guidelines any related protocols
- Reviewing files from Collections Unit staff, as provided
- Determining if civil action can be taken or if third party collection should be pursued
- Ensuring documentation/records of all transactions are maintained, and
- Recommending Defaulted Fines for Write-off, where applicable

Administration

The City operates its municipal court pursuant to a Memorandum of Understanding (MOU) with the Attorney General for the Province of Ontario. Among other things, the MOU requires the municipality to collect and enforce Fines as authorized under the Act. The Collections Unit, Revenue and Materiel Management Division, Corporate Services Department, in consultation with the Court Administration Section, Legislative Services, Corporate Services Department, administers the collection and/or Write-off of Fines.

Background

Tickets issued under the Act provide the Offender the following three options:

Option 1: Plea of guilty with payment (no Court appearance)
Option 2: Early resolution meeting with a prosecutor to discuss a resolution of the matter
Option 3: Trial with notice of intention to appear in Court

The Offender must choose one of the options within fifteen calendar days of the date the Ticket is issued. If the Offender fails to do so or if the Offender does not appear for trial, they are deemed to not wish to dispute the charge and a Justice of the Peace may enter a conviction in their absence.

Upon conviction, the Offender is required to pay the set Fine, including costs and the applicable Victim Fine Surcharge. In addition, an administrative fee is payable if the Offender does not pay the Fine by the due date. At this point the Fine is considered to be a Defaulted Fine.

Note: The Victim Fine Surcharge is paid to the Province first. The remaining payment is then applied toward the Fine and any other fees.

Collection Process

Final Notice

On or about the first week of each month, the Collections Unit receives a file from the Ministry of the Attorney General (MAG) listing newly Defaulted Fines.

Final Notice for payment is to be issued. A Defaulted POA Fines Administrative Fee may be applied in accordance with the General Fees and Charges By-Law, as amended.

Final Notices are not issued where the Defaulted Fine is less than $5.00. These fines will be written off, as further collection efforts exceed the value of the debt.

Collection Methods

If payment is not received within 15 calendar days, the following collection actions will be taken, based on the most effective collection method:

- Added to the City property tax roll or the tax roll of another municipality, or
- Forwarded to the Legal Services Division, City Manager's Department, to review for civil action, or
- Forwarded to a third party Collection Agency

All collection steps undertaken will be documented in CAMS.

Adding to the Tax Roll

In accordance with Section 441.1 of the *Municipal Act, 2001*, Defaulted Fines will be added to the tax roll of property owners, either in Mississauga or another municipality, where possible, and collected as taxes. The City may pursue and execute agreements with other Ontario municipalities to allow unpaid *Provincial Offences Act* fines to be added to the tax roll in those municipalities for collection purposes and to collect such amounts on behalf of the other municipalities on a reciprocal basis.

The Director, Revenue and Materiel Management is authorized to enter into inter-municipal agreements for the collection of outstanding *Provincial Offences Act* fines with other municipalities and execute all necessary documents, in a form satisfactory to Legal Services.

Civil Action

If the Defaulted Fine cannot be added to the tax roll, Legal Services will make an assessment as to whether further civil action is appropriate. Where it is determined that civil action should not be pursued, the file will be returned to the Collections Unit to pursue via a third party Collection Agency.

Files will remain with Legal Services until any initiated civil enforcement action has been completed or until Legal Services has exhausted all collection efforts available to them. At this time the files are returned to Collections. All fees incurred by the City related to civil enforcement will be the responsibility of the Offender.

Civil enforcement for the collection of Defaulted Fines may include any or all of the following actions:

- Negotiated payment arrangements with the Offender
- Writ of seizure and sale of land and/or property
- Judgment debtor examination
- Garnishment

Collection Agencies

Section 304 of the *Municipal Act, 2001* and the City's By-Law 0138-2003, as amended, authorize the use of Collection Agencies for the recovery of debts and allows Collection Agency fees to be passed on to the debtor. To maximize collection efforts, multiple Collection Agencies are used; however, at no time will more than one Collection Agency attempt collection of the same debt at the same time.

Collection Agencies are only used for the collection of Fines with balances greater than $55.00.

If the Collection Agencies are unsuccessful and the file is returned to the City, Collections staff will review the debt to determine if another avenue for collection is available. If no other collection alternative is available, the Fine will be deemed uncollectible and submitted for Write-off.

Extensions, Appeals and Re-openings

When the courts have granted an extension and appeal or a reopening, collection efforts will cease.

Uncollectible Due to Administrative Situations

The City will cease collection efforts if an administrative error has occurred. Documentation required to cease collection efforts in other circumstances is as follows:

- Deceased person - satisfactory proof of death which may include:
  - Funeral director or government issued death certificate

  - Notification from MTO/enforcement agency

- Declaration of Payment - affidavit by the Offender as to payment and payment details and Courthouse staff investigation of payment details provided

Post-judgement Interest

Post-judgement interest is only added on Fines that have a Certificate of Default filed with the Court. The interest accrues monthly on outstanding amounts based on the interest rate outlined quarterly by the Ministry of the Attorney General.

Administration Fees

Fees may be added to a Defaulted Fine, in accordance with the Fees and Charges By-law, as amended.

Write-off of Uncollectible Fines

The provincial government provides authority for municipalities to remove uncollectible Fines from active collection through a write-off process for administrative purposes only. All reasonable efforts to collect Defaulted Fines imposed under the POA must be made before any Write-off is considered.

Uncollectible Fines that are written off by the City do not absolve an Offender from the requirement to pay the Fine. Debts to the Crown only cease to be owed upon payment of the Fine or when the debtor is deceased.

Write-off Process

Collections Unit staff will complete an annual Write-off Report summarizing the cases that have been identified for Write-off. The reason and total value of each Fine for Write-off will be included.

Authorization to Write-off

The Director, Revenue & Materiel Management may authorize the monthly write-off of the unpaid balance of fines if the amount owing is $55.00 or less.

The Commissioner, Corporate Services is authorized to write off all uncollectible Fines of $25,000 and under on the recommendation of the Collections Unit, who will provide their recommendations for Write-off on a quarterly basis. Circumstances that may result in the recommendation to Write-off uncollectible Defaulted Fines include:

- The second placement Collection Agency returns the Fine as uncollectible or untraceable or advises that no assets remain to pursue further collection
- Litigation against an offender is unsuccessful

- Upon notification from the trustee in bankruptcy indicating that no dividends are available to cover a bankruptcy claim
- On the advice of Legal Services indicating the City's claim would not be successful
- The Offender is deceased (satisfactory proof of death is required)
- The offender has no fixed address and cannot be located
- All collection methods are deemed to be exhausted, or
- Further collection efforts exceed the value of the debt

Note: The Commissioner will report annually, through the Year End Report on Operating Financial Results, the total dollar amount of all individual Fines $25,000 and under that are written off. The Commissioner will obtain Council approval to write off uncollectible Fines over $25,000.

Removal from CAMS and ICON

Upon receipt of approval from Council, the Commissioner or the Director, Collections Unit staff will update CAMS to indicate the Fine has been written off. No data will be changed or deleted from CAMS until all required approvals have been granted. Court Administration staff will update ICON to indicate the Fine has been written off.

Reinstatement to Active Collection

Collection activities of accounts that have been written off can be resumed if required, as Fines imposed by POA Courts are debts owed to the Crown and therefore not subject to the *Limitations Act, 2002*. At any time the Manager, Revenue & Taxation or Manager, Court Administration can reinstate Fines to active collection.

Collections Unit staff and Court Administration staff will reinstate the Fine in CAMS and ICON as required.

Reporting

The Supervisor, Collections will prepare a monthly Defaulted Fines Aged Receivables Status report. The report will be reviewed by the following:

- Manager, Revenue & Taxation
- Director, Revenue & Materiel Management
- Manager, Court Administration, and
- Director, Legislative Services & Office of the City Clerk

Records Retention

Records will be retained for the period specified in the City of Mississauga's Records Retention By-law 0097-2017, as amended. Documentation should include:

- The Ticket and/or other relevant information
- Any payment information

- A record of the costs and fees included in any outstanding Fine amount
- A record of all collection activities undertaken, and
- The reason for all Write-offs and any supporting documentation (e.g. death certificate)

Revision History

Reference	Description

REPORT 1 - 2018

To: CHAIR AND MEMBERS OF GENERAL COMMITTEE

The Towing Industry Advisory Committee presents its first report for 2018 and recommends:
TIAC-0001-2018
That report from the Commissioner of Transportation and Works titled “Parked Tow Truck Owners Licences” be referred to the February 20, 2018 Towing Industry Advisory Committee meeting.
(TIAC-0001-2018)

TIAC-0002-2018
That the 2018 Towing Industry Advisory Committee Action List be received.
(TIAC-0002-2018)

REPORT 1 - 2018

To: CHAIR AND MEMBERS OF GENERAL COMMITTEE

The Road Safety Committee presents its first report for 2018 and recommends:

RSC-0001-2018
That Transportation and Works Staff prepare a draft 2018 Work Plan for the Road Safety Committee based on the brainstorming session held on January 30, 2018 and that the Work Plan be considered at a future Road Safety Committee meeting for approval.
(RSC-0001-2018)

RSC-0002-2018
That the Road Safety Committee supports the Region of Peel Vision Zero framework and that Council be requested to consider a motion to adopt the Region of Peel Vision Zero framework to improve safety on our roads in the City of Mississauga.
(RSC-0002-2018)

RSC-0003-2018
That the email from Mickey Frost, Director of Works Operations and Maintenance, dated December 6, 2017, with respect to Default Speed Limit Changes, be received.
(RSC-0003-2018)

RSC-0004-2018
That the Member Updates entitled, Peel Regional Police Road Watch Statistics dated, January 23, 2018, be received.
(RSC-0004-2018)

REPORT 1 - 2018

To: CHAIR AND MEMBERS OF GENERAL COMMITTEE

The Traffic Safety Council presents its first report for 2018 and recommends:

TSC-0001-2018
That the deputation by resident Antonia Palmer with respect to children's safety at school Kiss and Ride areas, be received.
(TSC-0001-2018)

TSC-0002-2018
1. That the request to extend the hours of the Crossing Guard at White Clover Way and Edenrose Street for the students attending St. Bernadette Catholic Elementary School be denied as the warrants have not been met.
2. That Traffic Safety Council conduct a further site inspection at the intersection of White Clover Way and Edenrose Street for the students attending St. Bernadette Catholic Elementary School in the spring 2018.

(Ward 6)
(TSC-0002-2018)

TSC-0003-2018
That the request for the placement of a crossing guard at the intersection of Glengarry Road and Cedarglen Gate for the students attending Hawthorn Public School and St. Jerome Catholic Elementary School be denied as the warrants have not been met.
(Ward 7)
(TSC-0003-2018)

TSC-0004-2018
That the request for the placement of a crossing guard at the intersection of Hazelridge Road and Rosehurst Drive for the students attending St. Albert of Jerusalem Catholic Elementary School be denied as the warrants have not been met.
(Ward 10)
(TSC-0004-2018)

TSC-0005-2018

1. That Student Transportation of Peel Region be requested to provide school bus service to all students being re-located from Mineola Public School to Forest Avenue Public School in September 2018.
2. That Traffic Safety Council be requested to schedule a site inspection to review the bus drop off and on-street vehicle flow in front of Forest Avenue Public School.
3. That Peel District School Board be requested to attend the site inspection to review Kiss and Ride and school bus drop off alternatives at Forest Avenue Public School.

(Ward 1)
(TSC-0005-2018)

TSC-0006-2018

1. That the request from Councillor Pat Saito on behalf of an area resident, for a site inspection to determine the warrants for a crossing guard on Plum Tree Crescent for students attending Plum Tree Park Public School be denied.
2. That Sheelagh Duffin, Supervisor, Crossing Guards, communicate to Councillor Pat Saito the rationale for not conducting a site inspection on Plum Tree Crescent.

(Ward 9)
(TSC-0006-2018)

TSC-0007-2018
That the updates to the Respectful Workplace Policy (01-03-06) and Workplace Violence Policy (01-07-01) be received for information.
(TSC-0007-2018)

TSC-0008-2018
That the Parking Enforcement School Zone Report for December 2017 be received.
(TSC-0008-2018)

TSC-0009-2018
That the Transportation and Works Action Items List for December 2017 be received.
(TSC-0009-2018)

REPORT 1-2018

To: CHAIR AND MEMBERS OF GENERAL COMMITTEE

The Accessibility Advisory Committee presents its first report for 2018 and recommends:

AAC-0001-2018
1. That the deputation and associated presentation by Jonathan Silver with respect to the Forward Movement, be received.
2. That the Accessibility Advisory Committee send a letter of endorsement to the Province noting their full support of the Forward Movement Accessible Signage.
3. That the Accessibility Advisory Committee request that Council endorse the utilization of the Forward Movement signage for implementation into City facilities, where feasible.
4. That the matter be referred to Facilities and Property Management staff to determine the feasibility of implementing the signage, and to include Communications support regarding education and awareness.

(AAC-0001-2018)

AAC-0002-2018
1. That the deputation and associated presentation by Hamish Campbell, Project Leader, and Jamie Brown, Manager, Municipal Parking with respect to the Parking Master Plan, be received.
2. That the Parking Master Plan be referred to the Facility Accessibility Design Subcommittee for consideration at the March 26, 2018 meeting.

(AAC-0002-2018)

AAC-0003-2018
That the verbal update by Jennifer Cowan, Accessibility Specialist with respect to the Accessibility For Ontarians With Disabilities Act, 2005 (AODA) be received.
(AAC-0003-2018)

AAC-0004-2018
1. That the memorandum dated January 29, 2018 from Rasul Kassam, Supervisor, Accessibility Planning with respect to the City of Mississauga 2017 Annual Accessibility Report & 2018-2022 Multi-Year Accessibility Plan including the MiWay 2017 Annual Accessibility Report, be received for information;
2. That the City of Mississauga 2017 Annual Accessibility Report & 2018-2022 Multi-Year Accessibility Plan including the MiWay 2017 Annual Accessibility Report be considered at the next meeting of the Accessibility Advisory Committee for review and endorsement.

(AAC-0004-2018)

AAC-0005-2018
1. That the memorandum dated January 26, 2018 from Trish Sarnicki, Legislative Coordinator with respect to Electronic Participation in Committee meetings, be received for information;

2. That the matter of electronic participation be referred to the next meeting of the Accessibility Advisory Committee.

(AAC-0005-2018)

AAC-0006-2018
That the Accessibility Advisory Committee Pending Work Plan Items be updated for the February 5, 2018 meeting of the Accessibility Advisory Committee be approved, as amended.
(AAC-0006-2018)

AAC-0007-2018
1. That the presentation regarding Accessible Tactile Plates to the Facility Accessibility Design Subcommittee on November 27, 2017 be received;
2. That subject to the comments on the presentation, the Facility Accessibility Design Subcommittee is satisfied with the design of the Accessible Tactile Plates.

(AAC-0007-2018)

AAC-0008-2018
1. That the presentation regarding Accessible Pedestrian Signals to the Facility Accessibility Design Subcommittee on November 27, 2017 be received;
2. That subject to the comments on the presentation, the Facility Accessibility Design Subcommittee is satisfied with the design of the Accessible Pedestrian Signals.

(AAC-0008-2018)

AAC-0009-2018
That Council Resolution No. 0254 – 2017 – “Forward Movement” Accessible Sign be received for information.
(AAC-0009-2018)

AAC-0010-2018
1. That the presentation for Paul Coffey Park Master Plan be received for information.
2. That the Legislative Coordinator make arrangements for the Paul Coffey Park Master Plan to be presented at a future Facility Accessibility Design Subcommittee meeting.

(AAC-0010-2018)

AAC-0011-2018
That the Updated Corporate Policy & Procedure: Respectful Workplace and Workplace Violence be received for information.
(AAC-0011-2018)

REPORT 2 - 2018

To: CHAIR AND MEMBERS OF GENERAL COMMITTEE

The Heritage Advisory Committee presents its second report for 2018 and recommends:

That the proposed alteration to 5155 Mississauga Road, as per the Corporate Report from the Commissioner of Community Services, dated January 11, 2018 be approved subject to the following conditions:

1. That the outstanding archaeological work related to the corresponding development application be completed, including the submission of corresponding letters from the Ministry of Tourism and Culture, confirming that all archaeological resource concerns have met licensing and resource conservation requirements; and

2. That a mason and carpenter with proven experience in heritage conservation and restoration, as well as a building mover with proven experience relocating heritage buildings, approved by the Director, Culture Division, oversee the project; and

3. That final full size building permit and engineering drawings, drawn to scale and dimensioned, with all interventions and impacts clearly marked, materials indicated, be submitted to Heritage Planning for review and comment; and

4. That an interpretation plan be submitted, to the satisfaction of the Director, Culture Division, and

5. That the project is subject to a letter of credit in the amount of $235,000 to ensure that the conservation plan, including the outbuilding relocation, is satisfactorily completed, not to be released until the building is ready for occupancy and the interpretation plan carried out; and

6. That the owner erect a sign, satisfactory to the Director, Culture Division, clearly visible along Mississauga Road, indicating that the house is in the process of being restored for future use; and

7. That if any changes result from other City review and approval requirements, such as but not limited to building permit, committee of adjustment or site plan approval, a new heritage permit application will be required. The applicant is required to contact Heritage Planning at that time to review the changes prior to obtaining other approvals and commencing construction.

8. That an alternate proposal, with a semi-detached or detached dwelling fronting Mississauga Road, rather than townhouses, at the northwest end of the property, be approved, subject to the conditions outlined above.

(HAC-0017-2018)

HAC-0018-2017
That the request to alter the property at 1352 Lakeshore Road East as per the Corporate Report from the Commissioner of Community Services dated January 11, 2018, be approved.
(HAC-0018-2017)

HAC-0019-2018
That the request to alter the property at 31 Lakeshore Road East as per the Corporate Report from the Commissioner of Community Services dated January 11, 2018, be approved.
(HAC-0019-2018)

HAC-0020-2018
That the request to alter the property at 1011 Old Derry Road as per the Corporate Report from the Commissioner of Community Services dated January 11, 2018, be approved.
(HAC-0020-2018)

HAC-0021-2018
That the request to alter the property at 7059 Second Line West as per the Corporate Report from the Commissioner of Community Services dated January 11, 2018, be approved.
(HAC-0021-2018)

HAC-0022-2018
That the property at 1570 Stavebank Road, which is listed on the City's Heritage Register, is not worthy of heritage designation, and consequently, that the owner's request to demolish proceed through the applicable process.
(HAC-0022-2018)

HAC-0023-2018
That the Corporate Report dated January 11, 2018 from the Commissioner of Community Services, entitled "Heritage Planning 2017 Year in Review," be received for information.
(HAC-0023-2018)

HAC-0024-2018
That the report dated January 19, 2018 from the Commissioner of Community Services entitled "Response to HAC-0041-2017 Analysis of the Heritage Property Grant Program" be received for information, and that staff be directed to investigate the feasibility of creating a separate Heritage Property Grant Reserve Fund, and review the uptake of the Town of Oakville and the City of Burlington grant programs.
(HAC-0024-2018)

HAC-0025-2018
That the Memorandum and the Heritage Impact Statement with respect to the alternations to a Heritage Listed Property located at 920 East Avenue (Ward 1), dated January 11, 2018, from Paul Damaso, Director, Culture Division, be received for information
(HAC-0025-2018)

HAC-0026-2018
That the renewal of the 2018 Community Heritage of Ontario Annual Membership at a cost of $75.00, as outlined in the Memorandum dated January 15, 2018 from Mumtaz Alikhan, Legislative Coordinator, be approved.
(HAC-0026-2018)

HAC-0027-2018
That the updated Corporate Policy 01-07-01 on *Workplace Violence*, and the updated Corporate Policy 01-03-04 on *Respectful Workplace*, as outlined in the Memorandum dated January 23, 2018 from Mumtaz Alikhan, Legislative Coordinator, be received for information.
(HAC-0027-2018)