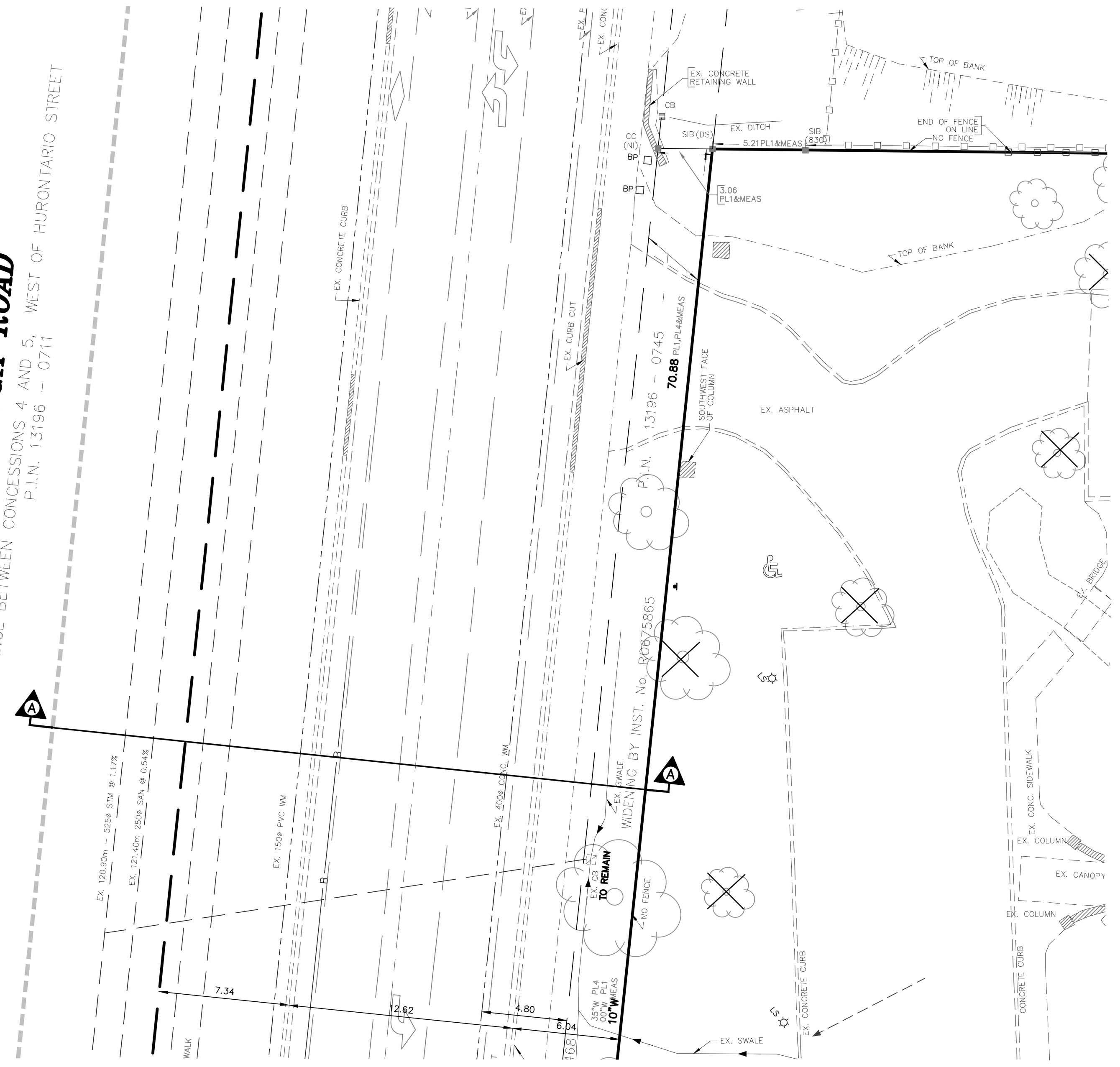

SCALE 1:250

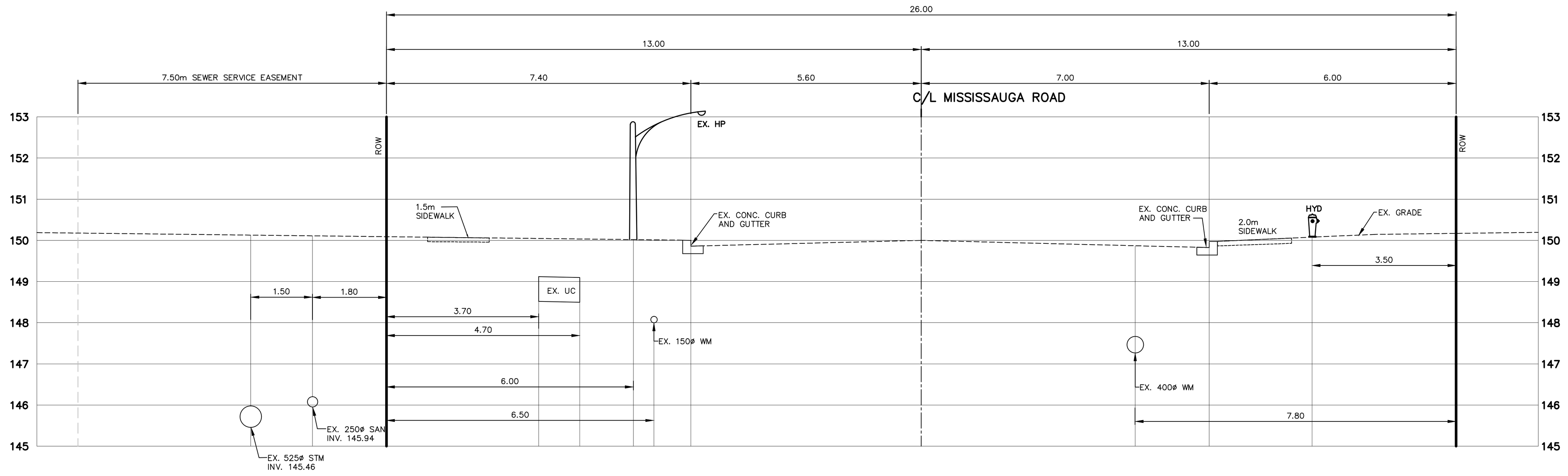

CROSS SECTION A-A
SCALE 1:100

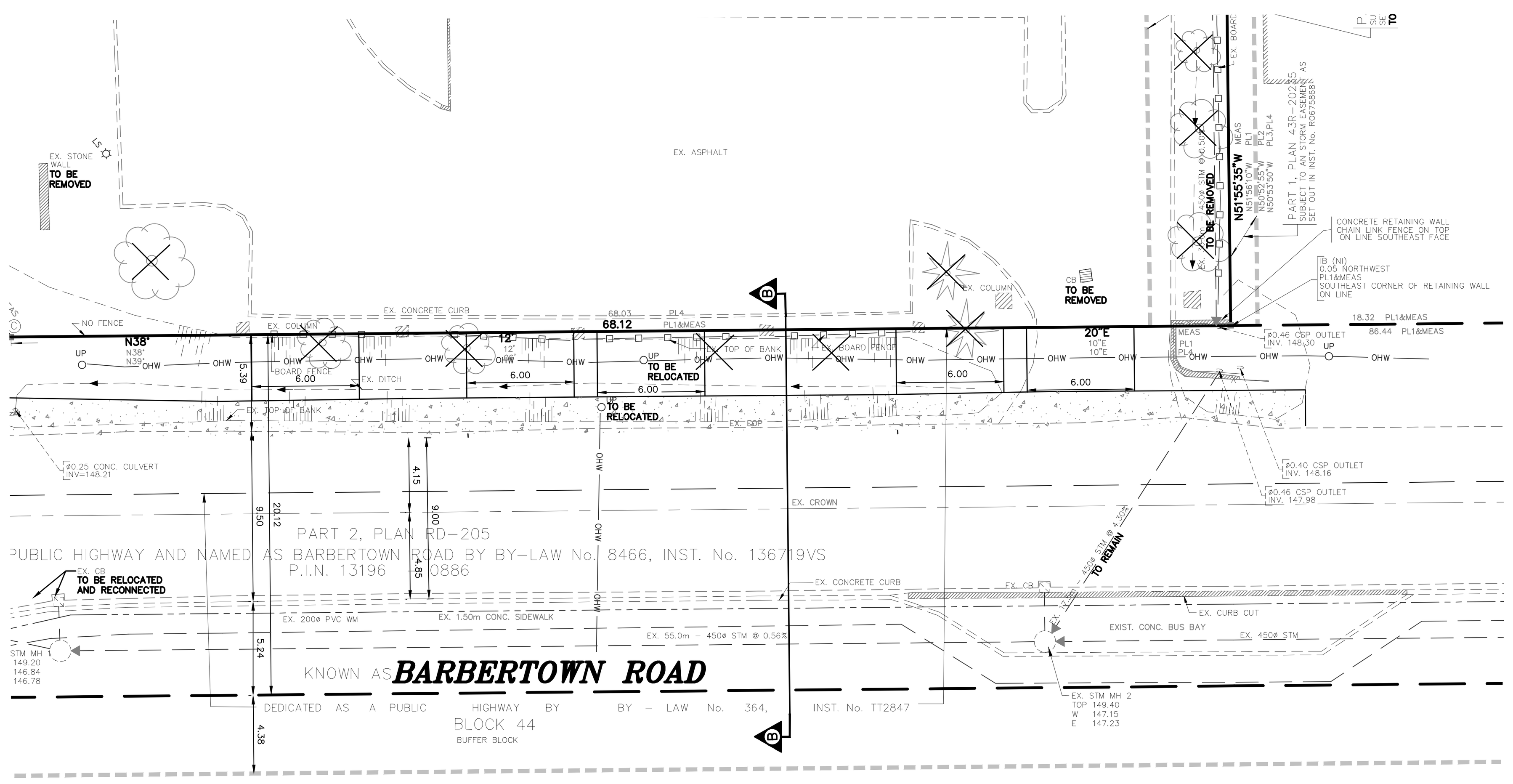

SCALE 1:250

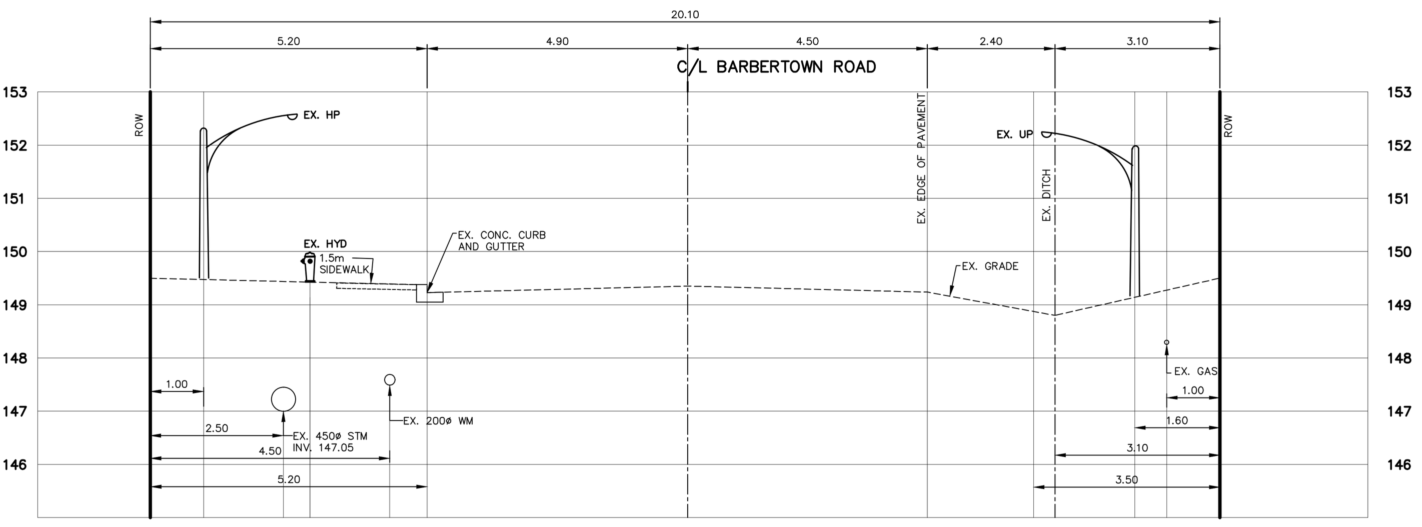

CROSS SECTION B-B
SCALE 1:100

LEGEND

- EXISTING STORM/SANITARY SEWER
- EXISING STORM MANHOLE
- EXISTING SANITARY MANHOLE
- EXISTING WATERMAIN (EX. 150ø WM)
- LIMIT OF PROPERTY

BARBER HOUSE

SKIRA & ASSOCIATES LTD.
CONSULTING ENGINEERS
3464 Semenyk Court, Suite 100, Mississauga, Ontario L5C 4P8
Tel. (905) 276-5100 Fax. (905) 270-1936 Email - info@skiraconsult.ca

UTILITY PLAN

PROJECT No. 215-M72	FIGURE No. 5
DATE - MARCH 2016	
SCALE - 1 : 250 / DRAWN BY - M.B.	